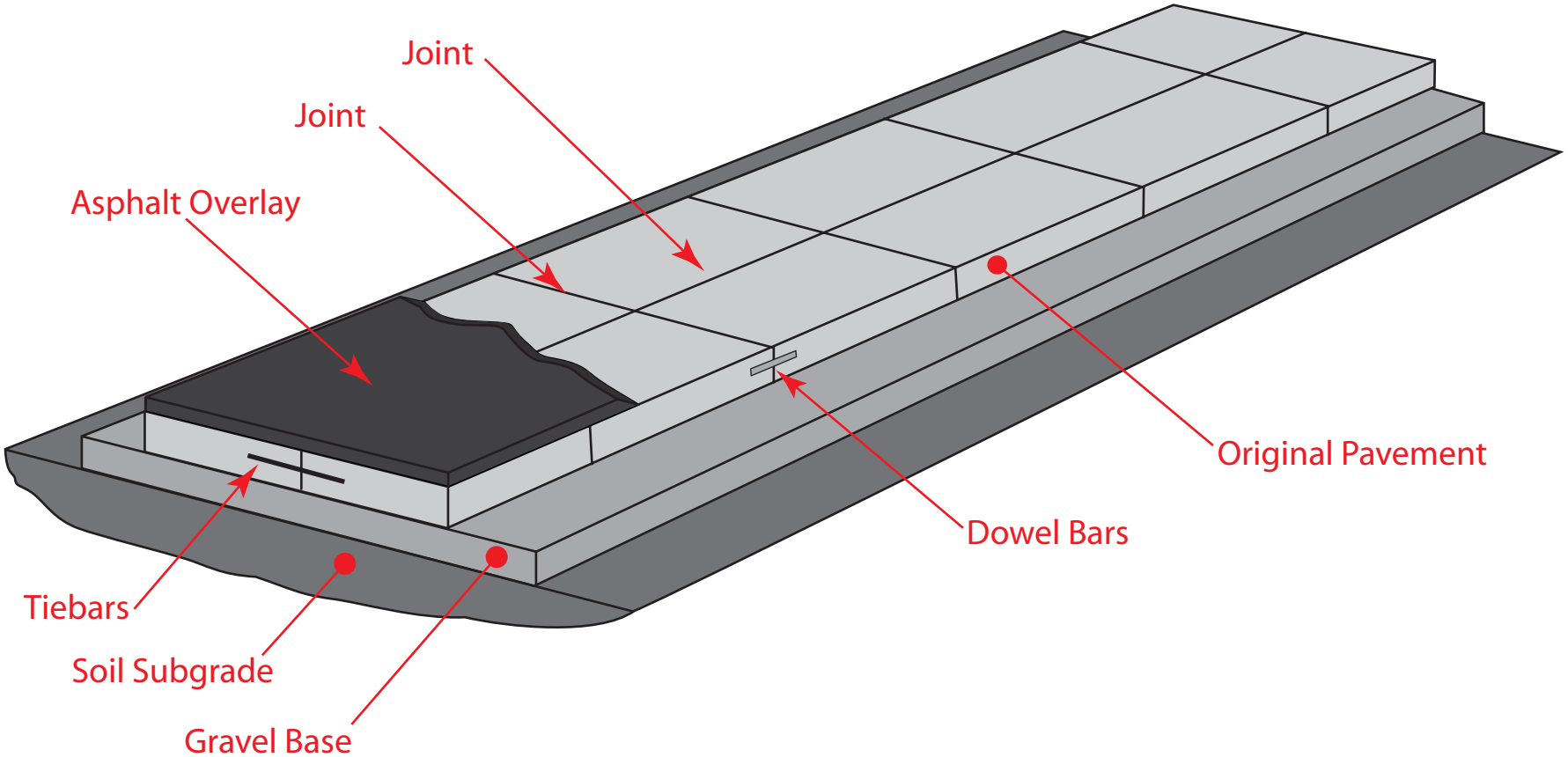Basic Pavement Components