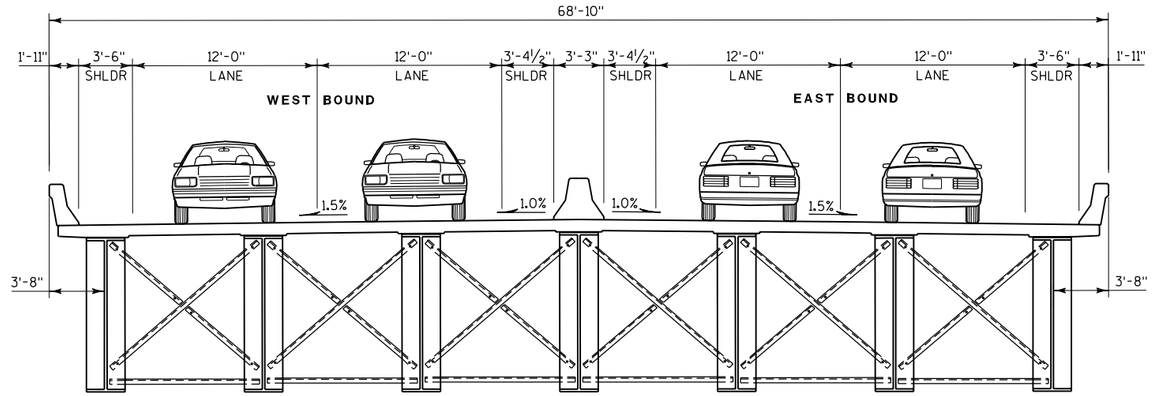

EXISTING TRI-COUNTY FREEWAY ACROSS LITTLE LAKE BUTTE DES MORTS
ROLAND KAMPO BRIDGE CROSS SECTION

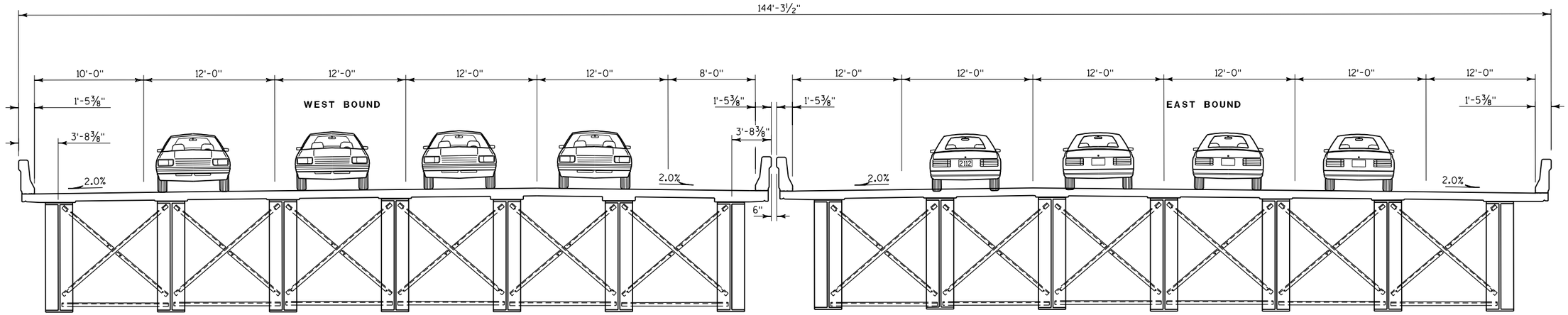

PROPOSED TRI-COUNTY FREEWAY ACROSS LITTLE LAKE BUTTE DES MORTS
ROLAND KAMPO BRIDGE CROSS SECTIONS

WISCONSIN DEPARTMENT OF TRANSPORTATION
TRI-COUNTY FREEWAY EXPANSION

ROLAND KAMPO BRIDGE
TYPICAL CROSS SECTIONS

US 10/WIS 441 ACROSS
LITTLE LAKE BUTTE DES MORTS

CH2M HILL, TEM, EMCS, TAD

NOVEMBER 2003