School Bus Inspection Manual

Prepared by the School Bus Project Action Team – April 2006

WISCONSIN STATE PATROL
SCHOOL BUS OUT-OF-SERVICE CRITERIA

TABLE OF CONTENTS

INSPECTION/OOS LISTINGS

Item	Page
DEFINITIONS	1-2
PURCHASER/EMPLOYER REQUIREMENTS	2-3
DRIVER REQUIREMENTS	3-5
OUT OF SERVICE	5
CONVERT A SCHOOL BUS	6
REBODY / CHARTER	7
AISLE	8
BARRIERS	9
BATTERY CARRIER AND CONNECTIONS	9
BOOK RACKS	10
BRAKES- AIR	10-14
BRAKES- AIR- STEER	14
BRAKES- AIR- PARKING	14
BRAKES- AIR- DRUMS	15
BRAKES- AIR- HOSES	15
BRAKES- AIR- WARNING DEVICE/ AIR LOSS RATE	15
BRAKES- AIR- RESERVOIR	15
BRAKES- AIR- COMPRESSOR	15
BRAKES- HYDRAULIC- GENERAL	16-18
BRAKES- HYDRAULIC- HYPOWER	18-19
BRAKES- HYDRAULIC- DUAL POWER	19-20
BRAKES- VACUUM	20-21
BRAKES- HYDRAULIC- HYDRO-MAX	21-22
BRAKES- HYDRAULIC- HYDRO-BOOST	23
BRAKES- HYDRAULIC – WABCO / INTERNATIONAL	24
BUMPERS	25
CAPACITY	25
COLOR	26
CONSTRUCTION	27
CROSSING GATE	28
DEFROSTER	28
DRIVE SHAFT	29
EMERGENCY WARNING EQUIPMENT	30
EMERGENCY EXITS	30-34
EXHAUST SYSTEM	34
FIRE EXTINGUISHER	35
FIRST AID KIT	35-36
FENDERS	36
FLOOR COVERING	36
FRAME	37
FUEL SYSTEM	37
HEATERS	37

SCHOOL BUS OUT-OF-SERVICE CRITERIA

TABLE OF CONTENTS

INSPECTION/OOS LISTINGS

Item	Page
HORN	38
INSIDE HEIGHT	38
INTERIOR	39
LADDERS	39
LIGHTS- LAMPS- REFLECTORS	39-44
MIRRORS	45-47
MOUNTING OF BODY	47
OPENINGS	47
RUB RAILS	48
SEATING	48-49
SERVICE DOOR	50
SIGNS AND LETTERING	50-52
STEERING	52-53
STEPS	54
STOP SIGNAL ARM	55-56
SUNSHIELD	56
SUSPENSION SYSTEM	57
TIRES	57-59
WHEELS	59-60
WINDOWS	61-62
WINDSHIELD	62
WINDSHIELD WIPERS	63
WIRING	63
SPECIAL SERVICE OPENING	64
POWER LIFT OR RAMPS	64-65
WHEELCHAIR FASTENERS	65-66
SEATS AND RESTRAINTS (SPECIAL ADDITIONAL REQUIREMENTS)	66-67
COMMUNICATIONS	67
AUTHORIZED OPTIONAL EQUIPMENT	67-69
INSPECTION PROCEDURES	69
APPLICABILITY	70

WISCONSIN STATE PATROL
TRANS 300 (4-2004)

TABLE OF CONTENTS

TRANS RULE LISTINGS

Item	SECT.	Page
PURPOSE AND SCOPE	300.01	1
DEFINITIONS	300.02	1-2
MANUFACTURER	300.10	2
DEALER	300.11	2
DISTRIBUTOR	300.12	2
PURCHASER	300.13	2-3
EMPLOYER REQUIREMENTS	300.15	3
DRIVER REQUIREMENTS	300.16	3-5
OUT OF SERVICE	300.18	5
REQUIREMENTS TO CONVERT A SCHOOL BUS	300.19	6
ADOPTION OF STANDARDS	300.20	6
REBODY REQUIREMENTS	300.21	7
CHARTER OPERATIONS	300.22	7
AISLE	300.25	8
ALTERNATOR, GENERATOR	300.26	8
BARRIERS	300.27	9
BATTERY	300.28	9
BATTERY CARRIER AND CONNECTIONS	300.29	9
BOOK RACKS	300.30	10
BRAKES	300.31	10-24
BUMPERS	300.32	25
CAPACITY	300.33	25
COLOR	300.34	26
CONSTRUCTION	300.35	27
CROSSING GATE	300.355	28
DEFROSTER	300.36	28
DRIVE SHAFT	300.37	29
EMERGENCY WARNING EQUIPMENT	300.38	30
EMERGENCY EXITS	300.39	30-34
EXHAUST SYSTEM	300.40	34-35
FIRE EXTINGUISHER	300.41	35
FIRST AID KIT	300.42	35-36
FENDERS	300.43	36
FLOOR COVERING	300.44	36
FRAME	300.45	37
FUEL SYSTEM	300.46	37

WISCONSIN STATE PATROL
TRANS 300 (4-2004)

TABLE OF CONTENTS

TRANS RULE LISTINGS

Item	SECT.	Page
HEATERS	300.47	37
HORN	300.48	38
INTERIOR	300.52	39
LADDERS	300.53	39
LIGHTS- LAMPS- REFLECTORS	300.54	39-44
MIRRORS	300.55	45-47
MOUNTING OF BODY	300.56	47
OPENINGS	300.57	47
RUB RAILS	300.58	48
SEATING	300.59	48-50
SERVICE DOOR	300.60	50
SIGNS AND LETTERING	300.61	50-52
STEERING	300.62	52-54
STEPS	300.63	54
STOP SIGNAL ARM	300.64	55-56
SUNSHIELD	300.65	56
SUSPENSION SYSTEM	300.66	57
TIRES	300.67	57-59
WHEELS	300.68	59-60
WINDOWS	300.69	61-62
WINDSHIELD	300.70	62
WINDSHIELD WASHER	300.71	62
WINDSHIELD WIPERS	300.72	63
WIRING	300.73	63
SPECIAL SERVICE OPENINGS	300.75	64
POWER LIFT	300.76	64-65
WHEEL CHAIR FASTENERS	300.77	65-66
SEATS AND RESTRAINTS (SPECIAL ADD. EQUIP)	300.78	66-67
COMMUNICATIONS	300.79	67
OPTIONAL EQUIPMENT	300.80	67
AUTHORIZED OPTIONAL EQUIPMENT	300.81	67-69
REPLACEMENT EQUIPMENT	300.85	69
ENFORCEMENT POLICY	300.86	69
INSPECTION PROCEDURES	300.87	69
APPLICABILITY	300.88	69
PENALTIES	300.89	69

SCHOOL BUS
INSPECTION GUIDELINES/ OUT-OF-SERVICE CRITERIA

Trans. 300.86

"*The division may not permit the use of any bus for school transportation purposes which is deemed to be unsafe or unfit for such service*."

The **"*School Bus Inspection Guidelines / Out-Of-Service Criteria*" (OOS)** was developed as a guide to assist inspection personnel and industry with the inspection process, as well as establishing a statewide uniform criteria for removing unsafe buses from service.

Items noted in this manual as out-of-service **shall** be enforced uniformly throughout the state as out-of-service. It should also be noted that this document is not all encompassing. Inspection personnel still have the discretionary ability to place a vehicle out-of-service which may contain defects which they believe, and can articulate to, warrant such an action. The potential for injury or mechanical breakdown should be factors used in the determination of an out-of-service action not outlined in this criteria.

In the case of defects not warranting an out-of-service action, repairs must be completed and the "certification" copy of the inspection form returned to the appropriate State Patrol Regional Headquarters within 5 days of the inspection. If repairs for a defect are going to require more than the 5-day exception, the bus shall not be used as a school bus until the repairs have been made and the certification copy forwarded to State Patrol.

04/17/06 PURPOSE AND SCOPE – TRANS 300.01

(1) The purpose of this chapter is to promote the safe transportation of pupils and other authorized persons in school buses as defined in s. 340.01(56), Stats.

(2) This chapter is intended to provide specific safety-related standards regarding the design, construction, inspection, and operation of school buses.

(3) This chapter provides for differing standards for vehicles of varying size and configuration.

DEFINITIONS – TRANS 300.02

In this chapter:

(1) "Attended" means the driver is in the immediate area of the school bus service door or, in the case of a bus equipped with a power lift, the driver is assisting a disabled person to board or exit the bus operating the power lift controls.

(1m)"Department" means the department of transportation.

(2) "Driver's compartment" means the area forward of the rearmost portion of the driver's seat across the entire width of the bus.

(2m)"FMVSS" means federal motor vehicle safety standard.

(3) "GAWR" Means the gross axle weight rating.

(4) "GVWR" means the gross vehicle weight rating.

(4m)"Rebody" means the placing of a new or replacement school bus body on a previously-licensed school bus chassis.

(5) "SAE" means the society of automotive engineers.

(6)(a) "School bus" or "bus" means a passenger motor vehicle which is designed to carry 10 or more passengers in addition to the driver, is painted in accordance with s. 347.44(1), Stats., and transports persons as described in s. 340.01(56)(a) and (am), Stats. A school bus may be classed as one of the following types:

1. A type "A" school bus is a conversion or body constructed upon a van-type or cutaway front- section vehicle with a left side driver's door, designed for carrying more than 10 persons. This definition shall include the following 2 classifications:

a. Type A-I, with a GVWR over 10,000 pounds.

b. Type A-II, with a GVWR of 10,000 pounds and under.

2. A type "B" school bus is a conversion or body constructed and installed upon a van or front-section vehicle chassis, or stripped chassis, with a gross vehicle weight rating of more than 10,000 pounds, designed for carrying more than 10 persons. Part of the engine is beneath or behind, or both, the windshield and beside the driver's seat. The entrance door is behind the front wheels.

3. A type "C" school bus is a body installed upon a flat back cowl chassis, with a gross vehicle weight rating of more than 10,000 pounds, designed for carrying more than 10 persons. All of the engine is in front of the windshield and the entrance door is behind the front wheels.

4. A type "D" school bus is a body installed upon a chassis, with the engine mounted in the front, mid-ship, or rear, with a gross vehicle weight rating of more than 10,000 pounds, designed for carrying more than 10 persons. The engine may be behind the windshield and beside the driver's seat, or it may be at the rear of the bus, behind the rear wheels, or mid-ship between the front and rear axles. The entrance door is ahead of the front wheels.

(b) "School bus" does not include an alternative vehicle, a human service vehicle, a motor bus or a motor vehicle operated as part of an urban mass transit system, in accordance with 340.01(56)(b), Stats.

(7) "Secretary" means the secretary of the department of transportation.

DEFINITIONS – TRANS 300.02 (Continued)

(7m)"Vehicular hazard warning lamps" means utilization of all turn signal lights simultaneously by actuating the vehicular hazard warning switch.

(8) "Wheelchair" means any specially constructed wheeled device used exclusively for the movement of physically disabled persons.

SUBCHAPTER 1 – PURCHASING AND OPERATING REQUIREMENTS

MANUFACTURER – TRANS 300.10

It is the vehicle manufacturer and the school bus body manufacturer's responsibility to manufacture a school bus in compliance with all federal and state standards applicable to the manufacturer of school buses. The vehicle manufacturer shall provide copies of every equipment recall to the administrator, Wisconsin division of state patrol, to assure appropriate repairs are made.

DEALER – TRANS 300.11

(1) It is the chassis dealer's responsibility to furnish a motor vehicle chassis that is to be combined with a school bus body that meets the applicable state standards that relate to chassis components. The chassis dealer is the statutory owner of the school bus.

(2) General practice through the years has made the school bus body distributor the person who actually delivers the school bus to the purchaser. The presale inspection shall be the responsibility of the dealer or the distributor delivering the school bus to the purchaser.

(3) The dealer or distributor that is required to secure the presale inspection shall be clearly indicated on the purchase order.

(4) The dealer shall assure that copies of all equipment recalls are provided to the division of state patrol.

DISTRIBUTOR – TRANS 300.12

The school bus body distributor acts as an agent of the final assembler of the school bus. The distributor is the agent that may arrange for the presale inspection of the school bus. If the purchaser wishes to arrange for the presale inspection, this shall clearly be stated on the purchase order. The distributor shall furnish a school bus body that meets the applicable state standards that relate to body components. The distributor or owner who furnishes a rebody shall arrange for the initial inspection prior to its use as a school bus.

PURCHASHER – TRANS 300.13

No person may purchase a school bus previously titled and registered in another state or jurisdiction to be used in Wisconsin school transportation that is in excess of 5 years of age from the original date of manufacture.

(1) Any person intending to purchase a motor vehicle to be used as a school bus shall provide the seller with a written notice of such intent prior to the signing of the purchase order. A notation on the purchase order shall fulfill this requirement.

(2) Any person intending to purchase a school bus body to be combined with a motor vehicle chassis to form a body-on-chassis type school bus shall provide the seller or distributor with a written notice of such intent prior to the signing of the purchase order. A notation on the purchase order shall fulfill this requirement.

PURCHASHER – TRANS 300.13 (Continued)

(3) Any persons purchasing a school bus may not use the vehicle for any pupil transportation unless the bus has been inspected by the department and approved for use as a school bus in Wisconsin. This may not preclude such use if items needing correction or alteration after the initial inspection are of a nature that would not affect safe transportation of students. The inspecting officer shall advise the owner if a new bus may be used while the items not in compliance are being corrected.

INSPECT/DEFECTS-	**PURCHASER REQUIREMENTS-** TRANS 300.13
1.	Check that bus is in compliance with Tr. 300.13(3) .
	****OOS if bus is not in compliance with Tr. 300.13(3).**

EMPLOYER REQUIREMENTS – TRANS 300.15

(1) Each employer of school bus drivers shall be responsible to determine that only qualified personnel operate school buses according to safe practices and that each bus is qualified for pupil transportation.

(2) The operator or owner of a school bus shall have a maintenance record file for each school bus. The maintenance record file shall be kept at the principal repair facility used for the bus. If the bus owner does not operate a repair facility, the record file shall be kept current at another location accessible for inspection. The record file shall be maintained for the life of the bus and shall contain:

a) Identification of the bus including make, model, vehicle identification number, and fleet number.

b) A record of repairs performed including the date and nature of repair.

(c) A record of the lubrication and preventive maintenance performed including date and nature of maintenance.

(d) The initial **pre-sale (2/3/99)** inspection and a copy of the latest inspection performed by state employees.

(3) All required records shall be open for inspection and presented to the secretary or designee upon demand. The secretary may periodically authorize deletion or destruction of material contained in the record file.

(4) A driver's written report of a bus defect or of an unsafe bus as determined during a pre-trip inspection or during the bus operation shall be maintained for a period of 7 calendar days after repair.

DRIVER REQUIREMENTS – TRANS 300.16

(1) Prior to the start of any trip the driver shall check the condition of the bus, giving particular attention to brakes, tires, lights, emergency equipment, mirrors, windows, and interior cleanliness of the bus. Defects shall be reported in writing to the person in charge of bus maintenance. The driver shall be responsible for the cleanliness of the interior of the bus and shall ensure that the windshield and mirrors are clean before each school bus operation **and that the strobe light is actuated whenever the bus is in operation on a highway for purposes specified in s. 340.01(56)(a) and (am), Stats** (rev. effective 05-01-99 for all buses equipped with strobe lights).

(2) Articles may not be transported within the bus body if there is or may be interference with the safe transportation of pupils or with the driver or if the articles obstruct the aisle, step-well, or steps. No animal, firearm, or other weapon of any sort, or articles not associated with school activity shall be permitted on a bus without the express, written authorization of the appropriate school administrator. The bus driver shall refuse admittance to any student not presenting the required written authorization. The driver shall designate where all such articles shall be carried in the bus. The provisions of this subsection do not apply to animals specially trained to aid disabled persons which may be permitted in accord with s. 174.056(1), Stats.

(3) The driver may not smoke or permit smoking aboard the school bus.

(4) A driver may not operate a school bus while under the influence of alcohol or a controlled substance or a combination of alcohol and a controlled substance or permit the use of alcohol or a controlled substance on any school

bus. The driver may not operate a school bus if he or she is under any medication, or combination of medication and alcohol, which may affect the safe operation of the bus.

(5) Drivers operating a school bus that meets the definition of a commercial motor vehicle shall comply with s. 346.63(5) and 346.63(7)(a), Stats.

(6) Drivers operating a school bus not meeting the definition of a commercial motor vehicle shall comply with the following:

(a) A driver may not consume an intoxicating beverage regardless of its alcoholic content within 4 hours before going on duty, or operating, or having physical control of, a school bus.

(b) A driver may not consume an intoxicating beverage regardless of its alcoholic content while on duty, or operating, or in physical control of, a school bus.

(c) A driver may not have in his or her possession any alcoholic beverage regardless of its alcoholic content while on duty or operating a school bus.

(d) A driver may not operate a school bus while having any measured alcohol concentration above 0.0.

(7) The driver shall maintain order among passengers being transported and shall promptly report any misconduct to the proper authority. The driver may assign a seating order.

(8) Loading stations or points shall be selected with due regard for traffic and pedestrian safety and shall be approved by school authorities. When flashing red warning lights are used as required by s.346.48, Stats., they shall be actuated continuously at least 100 feet before stopping. The stop arm shall be used in conjunction with the flashing red warning lights and shall be extended only after the bus comes to a stop. Except where there are special loading zones where the bus is entirely off the traveled portion of the highway, the bus shall be stopped on the traveled portion of the highway in the lane farthest to the right which is improved, designed or ordinarily used for vehicular travel, excluding the berm or shoulder. The flashing red warning lights may not be extinguished until loading or unloading is completed and persons who must cross the highway are safely across. The stop arm shall be retracted before putting the bus in motion.

(9) A school bus may not be stopped on any portion of a highway for the loading or discharge of pupils or other persons unless the bus is painted the yellow and black school bus color combination, is equipped with a stop signal arm and alternating flashing red lights and is identified by a school bus sign. The subsection does not apply to a vehicle which is operating within a municipality and which is not readily identifiable as a school bus. When loading or discharging pupils in a rural area, a vehicle not identifiable as a school bus shall do so off the highway and in such a manner that the pupils do not have to cross the highway.

(10) The driver shall make sure that there is no traffic danger before allowing pupils to cross the highway. Pupils obliged to cross the highway shall be required to cross from a point at least 10 feet forward of the standing bus only after receiving a signal from the driver. When discharging passengers the driver may not proceed until all persons are at a safe distance away from the bus or, if crossing the roadways, they are safely across the street or highway. This subsection applies only where flashing red signals are required by s. 346.48, Stats., or authorized by s. 349.21, Stats.

(11) A driver may not leave the bus unattended with the engine running or the key in the ignition when pupils are in the bus or in the immediate area of the bus.

(12) Except as provided in sub. (15), the doors of a bus shall be closed securely before starting and shall remain closed while the bus is in motion. Abrupt starts and stops or sudden maneuvers are prohibited, except in an emergency.

(13) The driver may not require nor permit any passenger to stand while the vehicle is in motion except while a passenger is going to a door or seat just prior to stopping or immediately after loading. This does not apply to chaperones or monitors in the performance of their duties. The driver may not permit any passenger to sit anywhere on the bus except in seats provided.

(14) The driver may not operate a school bus beyond the legal posted speed limits on any town, county, municipal, state or federal highway.

(15) The driver of a school bus required to stop at a railroad crossing by s. 346.45, Stats., shall come to a full stop at a distance of not less than 15 feet nor more than 50 feet before crossing at grade any track of a railroad. The vehicle hazard warning lamps shall be used when the bus is slowing for the stop and shall remain on until the bus has resumed normal speed. While the bus is so stopped, the driver shall open the service door and listen and look in both directions along the track for any approaching train and for signals indicating he approach of a train. After stopping and upon proceeding when it is safe to do so, the driver of the bus shall cross only in the gear of the bus that will make it

DRIVER REQUIREMENTS – TRANS 300.16 (Continued)

unnecessary to manually shift gears while traversing the crossing, and the driver may not shift gears while traversing the crossing. The service door shall remain open until the front wheels of the bus have cleared the first set of tracks for each required stop, but shall be closed before shifting.

(16) In case of an accident or a breakdown, when practicable, the driver shall remain with the bus and may send 2 responsible pupils or other passengers to the nearest place for help unless aid has been secured by means of 2-way communication.

(17) The use of audio headsets by drivers shall be prohibited.

(18) Drivers shall check the entire interior of the school bus following each trip to assure all passengers are off the bus.

(19) Drivers, school boards, transportation supervisors, and bus owners shall cooperate at all times with authorized division of state patrol personnel in carrying out the inspection of school buses and equipment.

(20) No persons except pupils, school employees, chaperones and other persons approved by the school or department authorities shall be permitted to ride in a school bus subject to this chapter, provided that school board members or an authorized department official conducting an inspection of the vehicle or examination of the driver's ability shall be given such privilege. Transportation of passengers in excess of the number posted in the bus is prohibited.

INSPECT/DEFECTS- DRIVER REQUIREMENTS- TRANS 300.16

1. Check that articles transported within the bus body do not, or may not interfere with the safe transportation of pupils or with the driver, or that any articles obstruct the aisle, step-well, or steps.

   ****OOS if articles transported within the bus body interfere or may interfere with the safety of persons on the bus.**

   ***OOS if aisle, step-well or steps are blocked.**

   Note: The bus is only out of service for as long as the defect/ violation exists.

2. Check driver for signs of alcohol use.

   **** OOS for 24 hours (CMV)**

   **** OOS until in compliance with Tr. 300 (Non-CMV)**

OUT OF SERVICE – TRANS 300.18

(1) Any bus that is found to be in such condition that it is unsafe to use as a school bus shall have an "out of service" sticker attached to the lower right corner of the windshield, and the vehicle may not be used as a school bus while the sticker is displayed.

(2) A vehicle with an "out of service" sticker displayed shall be re-inspected by and shall have the sticker removed by an employee of the division of state patrol or authorized agent of the carrier at the direction of the division of state patrol employee prior to reuse as a school bus.

(3) It shall be illegal for any person other than an agent of the department to remove, conceal or obstruct an "out of service" sticker unless the vehicle:

(a) Has the base school bus registration removed.

(b) Is re-registered in such a manner as to prohibit its use as a school bus.

(c) Is converted to meet the requirements of Trans. 300.19.

REQUIREMENTS TO CONVERT A SCHOOL BUS – TRANS 300.19

The owner of every vehicle identified as a school bus by color, signs, and lights which is converted from a school bus to some other type of vehicle shall comply with the following requirements:

(1) Repaint the entire vehicle to a color other than glossy yellow or any color commonly referred to as yellow.

(2) Physically remove the flashing red lights from the vehicle; the mere disconnection, covering or repainting of the flashing red lights does not comply with this requirement.

(3) Remove the stop signal arm.

(4) Remove any sign identifying the vehicle as a school bus.

ADOPTION OF STANDARDS – TRANS 300.20

(1) Pursuant to s. 227.21, Stats., the attorney general and the revisor of statutes have consented to the incorporation by reference of the following standards. (Rev.2/1/99)

(a) SAE J579c – sealed beam headlamp units for motor vehicles. SAE standard approved January 1940 and last revised by the lighting committee December 1984.

(b) SAE J585e – tail lamps (rear position lamps). SAE standard approved March 1918 and last revised by the lighting committee March 1986.

(c) SAE J586 Feb 84 – stop lamps. SAE standard approved February 1927, completely revised by the lighting committee December 1989.

(d) SAE J587 Oct 81 – license plate lamps. SAE standard approved March 1918 and last revised by the lighting committee August 1985.

(e) SAE J588f – turn signal lamps. SAE standard approved February 1927 and last revised by the lighting committee June 1991.

(f) SAE J592 Jan 84 – clearance, side marker, and identification lamps. SAE standard approved January 1937 and last revised by the lighting committee March 1990.

(g) SAE J593e – backup lamps. SAE standard approved August 1947 and last revised June 1989.

(h) SAE J887 May 82 – school bus warning lamps. SAE standard approved July 1964 and completely revised August 1987.

(i) SAE J914b – side turn signal lamps. SAE recommended practice approved February 1965 and last revised November 1989.

(j) SAE J1133 April 84 – school bus stop arm. Report of the lighting committee, approved April 1976, completely revised July 1989.

(k) Federal Regulations adopted. The federal regulations in title 49, Code of Federal Regulations, part 393, parts and accessories necessary for safe operation, and part 571, motor vehicle safety standards, adopted by the United States department of transportation and in effect on October 1, 1996 shall be enforced in relation to a school bus under this chapter as thought the regulations were set out in full in this chapter.

Note: Copies of the references are on file in the offices of the division of state patrol, the secretary of state, and the reviser of statutes; or may be purchased from the Society of Automotive Engineers (SAE), 400 Commonwealth Drive, Warrendale, PA 15096. The standards are noted in the SAE handbook, 1997 edition. Any standard or recommended practice shall be treated as an approved standard and shall not be advisory in nature.

REBODY REQUIREMENTS – TRANS 300.21

(1) A school bus may be upgraded by the installation of a new body on an older chassis. This product will be known as a rebody school bus.

(2) A chassis provided for a rebody shall be currently titled and licensed as a school bus in Wisconsin.

(3) Proof shall be presented to the school bus body distributor that all chassis defects from the previous inspections have been corrected.

(4) The following items shall have been replaced with new or rebuilt parts within 12 months prior to the time of rebody:

(a) All brake lines replaced with steel or stainless steel lines and all brake hoses replaced.

(b) Hydrovac and related lines.

(c) Vacuum tanks.

(d) Shock absorbers.

(e) If air equipped, all tanks, lines diaphragms, and valves.

(5) Any chassis 5 years old or less that has the items in sub. (4) may be waived from replacement provided the school bus body distributor is satisfied it is like-new condition.

(6) The replacement body shall meet all FMVSS requirements applicable at the time the body was manufactured.

(7) All rebody school buses shall be inspected by the division of state patrol before operation as a school bus. This inspection shall be the same inspection as Trans. 300.13(3).

INSPECT/DEFECTS- PURCHASER REQUIREMENTS- TRANS 300.21

Check that bus is in compliance with Tr. 300.21.

****OOS if bus is not in compliance with Tr. 300.21.**

CHARTER OPERATIONS – TRANS 300.22

A school bus may be used temporarily as a motor bus for transportation purposes if the following requirements are met:

(1) The registration requirements as provided in s. 341.26(7), Stats.

(2) The lettering as prescribed by s. 347.44(1)(c), Stats., is covered or removed. This may be accomplished by substituting the word “charter” for “school”. This subsection does not apply when transporting children for any purpose under s. 346.48(2)(c), Stats.

AISLE -- TRANS 300.25

(1) Every type A-I,B,C or D school bus or type A-II school bus manufactured in 2 stages, shall have a center aisle with a minimum clearance 12 inches wide. The center aisle shall be the open area that pupils entering the service door utilize to gain access to their seats. The center aisle shall extend from the driver's compartment to the emergency exit at the rear of the bus. The school bus that has a side emergency door shall, in addition, have a 12-inch wide aisle from the center aisle to the side emergency door. The intent of this requirement is to provide a 12-inch wide, unrestricted aisle to any emergency door.

(2) An open area for wheelchairs is not an aisle.

INSPECT/DEFECTS- **AISLE** -- TRANS 300.25

1. Without depressing cushions, **measure** center aisle space between outer edges of cushions.

2. **Check** that center aisle extends from driver's compartment to emergency door in rear.

3. On school buses with a side emergency door, **check** that aisle space from center aisle to side of emergency door is 12 inches by measuring between the vertical line of the seat back and the face of the next seat cushion or bottom of a fold-up seat.

ALTERNATOR, GENERATOR -- TRANS 300.26

(1) The alternator or generator shall have a capacity that meets or exceeds the minimum requirement for the reserve capacity rating of the battery.

(2) A school bus of more than 15,000 pounds GVWR shall be equipped with an alternator or generator of at least 100 ampere rating.

(3) A school bus of 15,000 pounds GVWR or less but more than 10,000 pounds GVWR shall be equipped with an alternator or generator of at least 80 ampere rating.

(4) A type A-II school bus shall be equipped with an alternator or generator of at least 60 ampere rating. If a school bus is equipped with a power lift, it shall be equipped with an 80 ampere or more rated alternator or generator.

INSPECT/DEFECTS- **ALTERNATOR, GENERATOR** -- TRANS 300.26

1. If school bus is over 15,000 pounds GVWR, **check** that the alternator has a minimum of 100 ampere rating.

2. If school bus is over 10,000 pounds but under 15,001 pounds GVWR, **check** that the alternator has a minimum of 80 ampere rating

2. If school bus is under 10,000 pounds GVWR, **check** that the alternator has a minimum 60 ampere rating. If equipped with a power lift, the minimum ampere rating is 80.

BARRIERS — TRANS 300.27

(1) Every type A-I, B, C or D school bus shall be equipped with a barrier forward of the foremost right and left front seats that complies with FMVSS 222, school bus seating and crash protection.

(2) A type A-II school bus manufactured in 2 stages shall be equipped with a barrier or a padded stanchion forward of the foremost right and left front seats. The barrier shall extend from the wall to the aisle. If a stanchion is utilized, the area immediately in front of the foremost seat shall be protected with a padded panel extending from no more than 4 inches above the floor to the crossbar. The stanchion bars shall be padded.

(3) If the bus meets any federal requirements relating to the use of seat belts, the bus shall, in addition, be equipped with barriers or stanchions as indicated in this section.

INSPECT/DEFECTS- **BARRIERS** — TRANS 300.27

1. If school bus is type a A-I, B, C or D school bus, **check** that it is equipped with a barrier forward of the foremost front seats.

****OOS if barrier missing, not padded, loose, missing parts or does not extend from wall to aisle where required.**

(2) If school bus is type a A-II school bus manufactured in 2 stages, **check** that it is equipped with a barrier (that extends from the wall to the aisle), or a padded stanchion (that extends from no more than 4 inches above the floor to the crossbar), forward of the foremost front seats.

****OOS if barrier or stanchion is missing, not padded, loose or missing parts, or stanchion does not extend to width of the seat immediately behind it.**

BATTERY — TRANS 300.28

(1) The storage battery shall have a cranking performance rating equal to or greater than the cubic inch displacement of the engine powered by any means other than with diesel fuel.

INSPECT/DEFECTS- **BATTERY** — TRANS 300.28

1. Other than buses powered by diesel fuel, **check** that the storage battery has a cranking performance rate equal to or greater than the cubic inch displacement of the engine. *(Compare cold cranking amps on battery or line setting ticket to engine cubic inch displacement).*

BATTERY CARRIER AND CONNECTIONS — TRANS 300.29

(1) All batteries shall be securely attached in a manner to prevent dislocation in the event of an accident. The battery may be mounted in the engine compartment or, when mounted outside of the engine compartment, it shall be contained in a closed, drained, weather-tight and vented compartment that shall retain the battery in the event of upset or roll over of the bus. If the battery is mounted in the body skirt, the battery compartment door or cover shall be secured by a latch. The battery shall not be located in the passenger compartment.

(2) The cables to the battery shall not be spliced.

INSPECT/DEFECTS- **BATTERY CARRIER AND CONNECTIONS** — TRANS 300.29

1. **Check** that the battery is either mounted in the engine compartment or, if mounted outside of the engine compartment, is in a closed, drained, weather-tight, and vented compartment that is latched ***(rev. 11-25-98)*.**

****OOS if located in passenger compartment.**

2. **Check** battery cables for corrosion, splicing or otherwise damaged.

BOOK RACKS — TRANS 300.30

(1) Book racks, if installed, shall be located above the side windows. They shall not extend forward of the foremost point of the front seat or across or above the emergency door.

(2) Book racks made of expanded, punched, or woven metal are not permitted.

(3) Book racks shall be free of projections or sharp edges.

(4) Bookracks are permitted only in buses with a minimum of 72" headroom.

INSPECT/DEFECTS- **BOOK RACKS** — TRANS 300.30

(1) If installed, **check** that the bookracks are located above the side windows and that the bus has a minimum of 72" headroom. **Check** that they do not extend in front of the foremost point of the front seat or across or above the **rear** emergency door. Note: If located above the side emergency exit door the label marking the emergency door shall be placed below the bookrack. **(rev. 03-19-99).**

****OOS if located anywhere other than above the side windows or if it extends in front of the foremost point of the front seat or across or above the emergency door.**

****OOS if made of expanded, punched or woven metal.**

****OOS if sharp edges or projections.**

****OOS if bus has less than 72" headroom.** *Refer to inside "height"* Tr. 300.49.

BRAKES — TRANS 300.31

(1) Every school bus shall meet federal brake standards under 49 CFR 393.40 and 393.52, 396.17, and applicable standards under 49 CFR 571.105 and 571.121, in effect at the time of manufacture. Each brake system including the parking brake shall be maintained in good working order. The brake system shall be free of any leaks. The lines and hoses may not be chafed, flattened or restricted in any way.

(2) A type A-I, B, C or D school bus that uses air assisted brakes shall be equipped with a low pressure warning system which functions at 60 PSI and lower. The governor cut out pressure may not exceed 135 PSI. The governor cut in pressure may not be lower than 80 PSI.

(3) A type A-I, B, C or D school bus that uses vacuum assisted brakes shall be equipped with a low pressure warning system which functions when the vacuum is 8 inches of mercury and less.

(4) A type A-I, B, C or D school bus when equipped with air or vacuum assisted brakes shall be equipped with a reserve tank having a capacity of not less than 1,000 cubic inches to provide additional air or vacuum for the primary brake system. There shall be a check valve or pressure protective valve to protect the system from loss of air or vacuum. There shall be no accessory except the low pressure warning device operated from the air or vacuum reserve tank or its connecting lines. The low pressure warning system shall be installed to indicate the air pressure or vacuum in the tank. The gauge required to monitor this system shall be visible to the driver at all times. Unless previously equipped, Type A-1 buses with a GVWR of 11,500 pounds or less that use vacuum assisted brakes are not equipped with an additional reserve tank and gauge, provided the vacuum assist system meets FMVSS No. 105.

(5) Every school bus shall be equipped with a power assist brake system.

(6) The interior of the brake drums, brake linings, brake discs, and pads shall be free of cracks and contamination from oil or grease.

(7) The brake systems shall be properly adjusted to provide maximum braking effort in accordance with 49 CFR 396.17 (Appendix G).

AIR BRAKES- (All)

1. **Check** for improper, missing, non-functioning, loose, contaminated (with grease or oil), or cracked parts on the brake system, such as brake drums, shoes, rotors, pads, lining, brake chambers, chamber mounting, push rods and slack adjusters.

2. **Check** for "S" cam flip-over.

3. **Listen** for audible air leaks around brake components and lines.

4. With the brake released, mark the brake chamber push rod at a point where the push rod exits the brake chamber. Mark the push rods on both sides at this time. All push rods will be **measure**d later.

5. **Check** that the slack adjusters are the same length (from center of "S" cam to center of clevis pin), and that the air chambers on the steering axle are the same size.

6.Check that the ABS brake system complies with FMVSS 121 on vehicles manufactured on or after March 1, 1998.

"S" Cam Air Brake Components

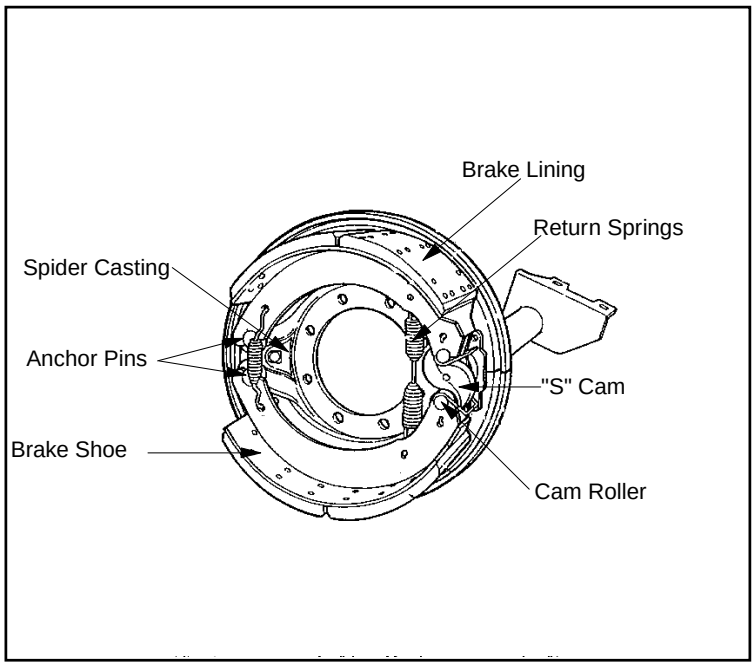

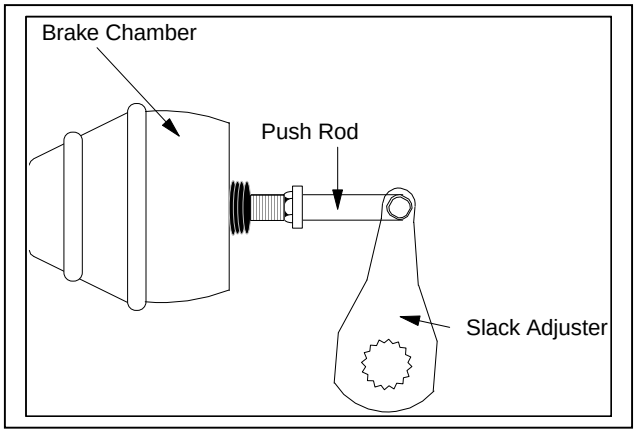

ALL OF THE FOLLOWING OOS

** OOS if:

****The number of defective brakes is equal to or greater than 20% of brakes on the vehicle or combination. A defective brake includes any brake that meets one of the following criteria:**

1. ****Absence of effective braking action upon application for the service brakes (such as brake linings failing to move or contact braking surface upon application.) (393.48(a))**
2. ****Missing or broken mechanical components including: shoes, linings, pads, spring, anchor pins, spiders, cam rollers, pushrods, and air chamber mounting bolts. (393.48(a))**
3. ****Loose brake components including air chambers, spiders, and camshaft support brackets. (393.48(a)**
4. ****Audible air leak at brake chamber (Example: ruptured diaphragm, loose chamber clamp, etc.) (396.3(a)(1)**
5. ****Brake adjustment limits. Bring reservoir pressure between 90 to 100 psi; turn engine off and then fully apply the brakes.**
   - ****One brake at ¼" or more beyond the adjustment limit.**
     (Example: Type 30 clamp type brake chamber pushrod measured at 2 ¼" would be one defective brake.)
     (396.3(a)(1)
   - ****Two brakes less than ¼" beyond the adjustment limit also equal one defective brake. Example: Type 30 clamp type brake chamber pushrods measure: Two at 2 1/8"**
   - ****The above example would equal one defective brake.**
     (396.3(a)(1)

6. ****Brake linings or pads. (Except on power unit steering axles.)**
   - ****Cracked, loose, or missing linings.**
   - ****Lining cracks or voids of 1/16" in width observable on the edge of the lining**
   - ****Portions of a lining segment missing such that a fastening device (rivet or bolt) is exposed when viewing the lining from the edge.**
   - ****Cracks that exceed 1 ½" in length.**
   - ****Loose lining segments (*rev. 11-25-98*).**
   - ****Complete lining segment missing. (393.47)**

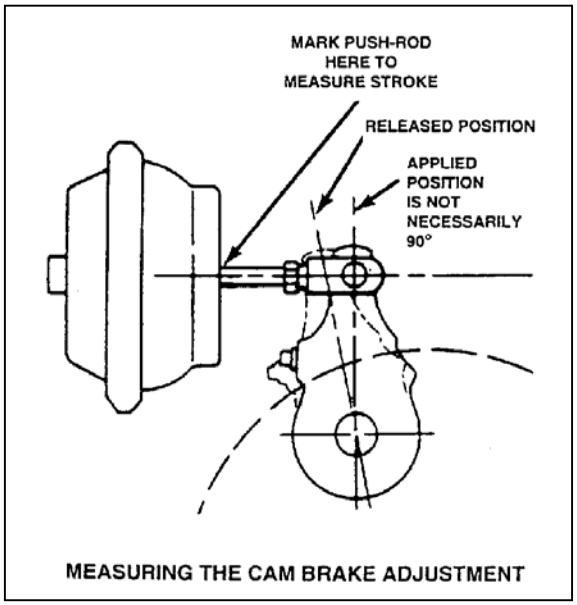

MEASURING THE CAM BRAKE ADJUSTMENT

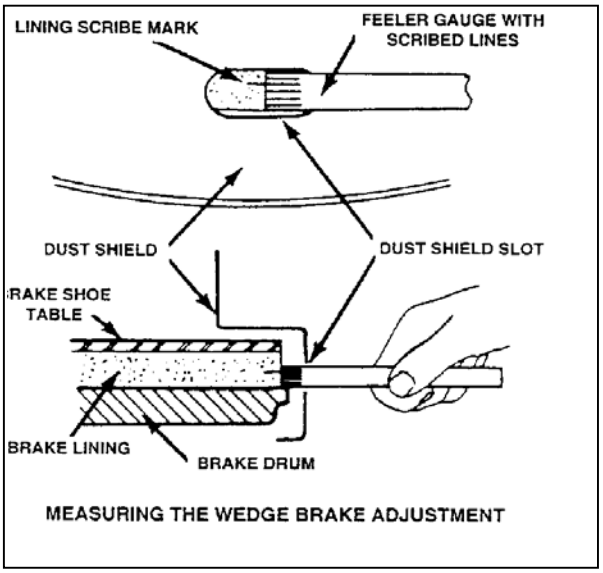

MEASURING THE WEDGE BRAKE ADJUSTMENT

REFERENCE CHART

Brake Adjustment: Shall not exceed those specifications contained hereunder relating to "Brake Adjustment Limit." (Dimensions are in inches.)

CLAMP TYPE BRAKE CHAMBER DATA

TYPE	OUTSIDE DIAMETER	BRAKE ADJUSTMENT LIMIT
6	4 ½	1 ¼
9	5 ¼	1 3/8
12	5 11/16	1 3/8
16	6 3/8	1 3/4
20	6 25/32	1 3/4
24	7 7/32	1 3/4
30	8 3/32	2
36	9	2 ¼

'LONG STROKE' CLAMP TYPE BRAKE CHAMBER DATA

TYPE	OUTSIDE DIAMETER	BRAKE ADJUSTMENT LIMIT
16	6 3/8	2.0
20	6 25/32	2.0
24	7 7/32	2.0
24*	7 7/32	2.5
30	8 3/32	2.5

* For maximum stroke type 24 chambers.

TIE ROD STYLE PISTON BRAKE CHAMBER DATA

SIZE	OUTSIDE DIAMETER	BRAKE ADJUSTMENT LIMIT
30	6 ½	2.5

BOLT TYPE BRAKE CHAMBER DATA

TYPE	OUTSIDE DIAMETER	BRAKE ADJUSTMENT LIMIT
A	6 15/16	1 3/8
B	9 3/16	1 3/4
C	8 1/16	1 3/4
D	5 ¼	1 ¼
E	6 3/16	1 3/8
F	11	2 ¼
G	9 7/8	2

ROTOCHAMBER DATA

TYPE	OUTSIDE DIAMETER	BRAKE ADJUSTMENT LIMIT
9	4 9/32	1 ½
12	4 13/16	1 ½
16	5 13/32	2
20	5 15/16	2
24	6 13/32	2
30	7 1/16	2 ¼
36	7 5/8	2 3/4
50	8 7/8	3

DD-3 BRAKE CHAMBER DATA

TYPE	OUTSIDE DIAMETER	BRAKE ADJUSTMENT LIMIT
30	8 1/8	2 ¼

NOTE: The DD3 brake chamber does not feature a push rod over-stroke indicator, because a splash boot completely covers the push rod. The DD3 can be easily distinguished from spring brake chambers by the number air lines attached to the chamber. A DD3 chamber has three (3) air lines attached, while a spring brake has 2. The DD3 is usually found on motor coaches.

****Evidence of oil seepage into or out of the brake lining/drum interface area. This must include wet contamination of the lining edge accompanied by evidence that further contamination will occur — such as oil running from the drum or a bearing seal.**

NOTE: Grease on the lining edge, back of shoe, or drum edge and oil stains with no evidence of fresh oil leakage are not conditions for out-of-service. (393.47)

- ****Lining with a thickness less than ¼ inch or to wear indicator if lining is so marked, measured at the shoe center for out-of-service. (393.47)**

7. **Missing brake on any axle required to have brakes. (393.42)

****STEERING AXLE BRAKES:**

In addition to being included in the 20% criterion, the following criteria places a vehicle out-of-service.

1. **Absence of effective braking action on any steering axle of any vehicle required to have steering axle brakes, including the dolly and front axle of a full trailer. (393.48(a)

2. **Mismatch across any power unit steering axle of:
- ****Air chamber sizes. (396.3(a)(a)**
- ****Slack adjuster length. (396.3(a)(1)**

3. **Brake linings or pads on the steering axle of any power unit:
- ****Cracked, loose, or missing lining.**
- ****Lining cracks or voids of 1/16" in width observable on the edge of the lining.**
- ****Portions of a lining segment missing such that a fastening device (rivet or bolt) is exposed when viewing the lining from the edge.**
- ****Cracks that exceed 1 ½" in length.**
- ****Loose lining segments (*rev. 11-25-98*).**
- ****Complete lining segment missing. (393.47)**

****Evidence of oil seepage into or out of the brake lining/drum interface area. This must include wet contamination of that lining edge accompanied by evidence further contamination will occur — such as oil running from the drum or bearing seal.**

NOTE: Grease on the lining edge, back of shoe, or drum edge and oil stains with no evidence of fresh oil leakage are not conditions for out-of-service. (393.47)

****Lining with a thickness less than 3/16" for a shoe with a continuous strip of lining or ¼" for a shoe with two pads for drum brakes or to wear indicator if lining is so marked, or less than 1/8" for air disc brakes, and 1/16" or less for hydraulic disc, drum and electric brakes. (393.47)**

End of 20% Brake Criteria

PARKING BRAKES:

****Any non-manufactured holes or cracks in the spring brake housing section of a parking brake. (396.3(a)(1)**

BRAKE DRUMS OR ROTORS (DISCS):

****Drums with any external crack or cracks that open upon brake application.**

NOTE: Do not confuse short hairline heat check cracks with flexural cracks. (396.3(a)(1)

****Any portion of the drum or rotor (discs) missing or in danger of falling away. 396.3(a)(1)**

BRAKE HOSE:

****Hose with any damage extending through the outer reinforced ply. (Rubber impregnated fabric cover is not a reinforced ply.) (Thermoplastic nylon may have braid reinforcement or color difference between cover and inner tube. Exposure of second color is out-of-service.) (396.3(a)(1)**
****Bulge, swelling when air pressure is applied. (396.3(a)(1)**

****Hose with audible leak at other than a proper connection. (396.3(a)(1)**

****Two hoses improperly joined such as a splice made by sliding the hose ends over a piece of tubing and clamping the hose to the tube. (393.46)**

****Air hose cracked, broken, or crimped in such a manner as to restrict air flow. (39.45(a)(4)**

BRAKE TUBING:

****Tubing with an audible leak at other than a proper connection. (396.3(a)(1)**

****Tubing cracked, damaged by heat, broken, or crimped. (396.3(a)(1)**

LOW PRESSURE WARNING DEVICE:

****Low pressure warning device missing, inoperative, or does not operate at 55 psi and below, or ½ of the governor cut-out pressure, whichever is less.** *NOTE: If either an audible or visual warning device is working, vehicle should not be placed out-of-service.* (393.51)

AIR LOSS RATE:

****If an air leak is discovered and the reservoir pressure is not maintained when:**

- ****Governor is cut-in**
- ****Reservoir pressure is between 80 & 90 psi**
- ****Engine is at idle, and**
- ****Service brakes are fully applied. (396.3(a)(1)**

AIR RESERVOIR:

**** OOS Air reservoir security, separated from its original attachment points. (393.50)**

AIR COMPRESSOR:

(Normally to be inspected when readily visible or when conditions indicate compressor problems.)

****OOS if loose compressor mounting bolts. (396.3(a)(1)**

****OOS if cracked, broken, or loose pulley. (396.3(a)(1)**

****OOS if cracked or broken mounting brackets, braces, or adapters. (396.3(a)(1)**

HYDRAULIC BRAKE SYSTEMS- GENERAL:

All school buses shall be in safe and proper operating condition at all times. These include parts and accessories in this section and any other additional parts and accessories which may affect safe operation. This section may not include all items specified in Trans. 300, therefore the applicable Federal Standard may have to be referenced when necessary.

1. Visually **inspec**t conditions of hydraulic system.

-inspect hydraulic hoses and tubes for leaks, cracks, chafing, flattened or restricted sections and improper support.

****OOS if brake hose or tubing is leaking fluid, flattened, restricted, or insecurely fastened.**

****OOS if brake hoses chafed/cracked through outer cover to fabric layer**.

****OOS if any observable bulge or swelling on a brake hose.**

2. Visually **inspect** condition of master cylinder (Normally inspected when readily visible or when problem is apparent).

-inspect for brake fluid level in reservoir.

****OOS if fluid level is below 25% full.**

3. Visually inspect condition of wheel cylinders and brake calipers.

-inspect wheel cylinders and brake calipers for fluid leaks. Do not confuse axle lubricant with brake fluid.

****OOS if any brake fluid leak is observed.**

-test for operation of light by turning ignition to start position (bulb check). Some vehicles will flash this "Brake" warning upon start up.(i.e. 1987 vacuum operated GM one ton chassis.)

-with ignition on and engine running, apply 125- 150 pounds of pedal force and observe light.

****OOS if wire is disconnected.**

****OOS if light is inoperative.**

****OOS if light comes on when brake pedal is depressed.**

4. Visually **inspect** condition of pressure differential switch and brake warning light. This is located by following the brake lines from a dual master cylinder to the switch. Many newer vehicles have the proportioning valve integrated into the master cylinder (Ford F & E Series and new IHC buses are examples). There will then be a plug into the side of the master cylinder which is a low fluid indicator in many cases (*Required after 1973*).

-inspect wire connection at pressure differential switch.

-test for operation of light by turning ignition to start position (bulb check). Some vehicles will flash this "Brake" warning upon start up (i.e. 1987 vacuum operated GM one ton chassis).

-with ignition on and engine running, apply 125 150 pounds of pedal force and observe light.

****OOS if wire is disconnected.**

****OOS if light is inoperative.**

****OOS if light comes on when brake pedal is depressed.**

5. Inspect condition of brake pedal reserve and hydraulic system.

-with engine running apply brakes with moderate foot force for one minute.

****OOS if less than 20% of the total available pedal travel remains.**

****OOS if service brake pedal moves slowly in applied direction while foot pressure is maintained** signifying a fluid leak.

6. **Inspect** condition of brake drums or rotors (discs).

-inspect drums and rotors for cracks or improper wear.

****OOS if cracks in drum open upon brake application (do not confuse short hairline heat check cracks with flexural cracks).**

****OOS if rotor surfaces are worn through.**

****OOS if any portion of the drum or rotor (disc) is missing or in danger of falling away.**

7. Visually **inspect** condition of brake linings.

-**inspect** linings for improper wear or contamination.

****OOS if lining cracks or voids of 1/16" in width observable on the edge of the lining.**

****OOS if portions of a lining segment missing such that a fastening device (rivet or bolt) is exposed when viewing the lining from the edge.**

****OOS if there are cracks that exceed 1 1/2" in length.**

****OOS if there is a loose lining segment (*rev. 11-25-98*).**

****OOS if complete lining segment is missing.**

****OOS if evidence of oil seepage into or out of the brake lining/drum or lining edge accompanied by evidence that further contamination will occur such as oil leaking from an axle seal.**

****OOS if lining has a thickness of 1/16" of less for disc or drum brakes.**

8. Visually and physically **check** condition of parking brake system and parking brake warning light.

-set the parking brake firmly to determine the reserve travel of the hand lever or foot pedal.

****OOS if Type B, C and D school bus cannot hold vehicle stationary for 5 minutes, in both forward and reverse direction on a 20 percent grade free from snow, ice, and loose materials (CFR 571.105 & CFR 571.121).**

****OOS if Type A school bus cannot hold vehicle stationary (to the limit of traction on the braked wheels) for 5 minutes in both forward and reverse direction on a 30 percent grade free from snow, ice and loose materials (CFR 571.105 & CFR 571.121).**

-inspect the band type parking brake on the drive shaft for the presence of oil or grease.

****OOS if brake lining is contaminated and evidence of oil seepage onto lining is present.**

****OOS if brake lining fails to make contact with drum**.

-while parking brake is applied **check** the parking brake warning light.

9. Visually and physically **check** condition of emergency brake system.

-inspect vehicle to assure the emergency brake system shall perform emergency stopping function and is constructed that single failure anywhere in the brake system which performs service brake function, excepting mechanical parts of wheel brake assemblies and brake pedal and brake pedal attachment to brake valves or master cylinder, will not leave vehicle without operative brakes capable of stopping vehicle when loaded up to and including manufacturers rated gross vehicle weight at any legal speed.

-inspect the control by which the driver applies the emergency brake system to assure it can be readily operated while being properly restrained by a seat belt.

-inspect to assure the controls for applying the service brake, parking brake, and emergency brake are not combined into one system. The emergency brake may be combined with either the parking or service brake.

****OOS if school bus is not equipped to provide emergency braking capabilities found in the brake performance table in CFR 49 Part 393.52.**

****OOS if driver cannot apply emergency brake system while properly restrained.**

****OOS if all three brake systems are combined.**

Hy- Power (Hydro-Boost/ Delco Moraine) Hydraulic Brake System (Chev, GMC, IHC before March 1987)

These requirements apply in addition to the general section:

1. Visually **inspect** master cylinder and hydraulic power booster.

-Observe any fluid leaks and check flow switch.

-dampness caused by fluid seeping, which is not visually detected when brakes are applied or steering action is occurring, is not a defect.

****OOS if fluid is leaking- if a leak is detected clean surfaces and with motor running rock steering and apply brakes, check for persisting leak.**

****OOS if flow switch is disconnected or inoperative.**

****OOS if power steering fluid reservoir is empty.**

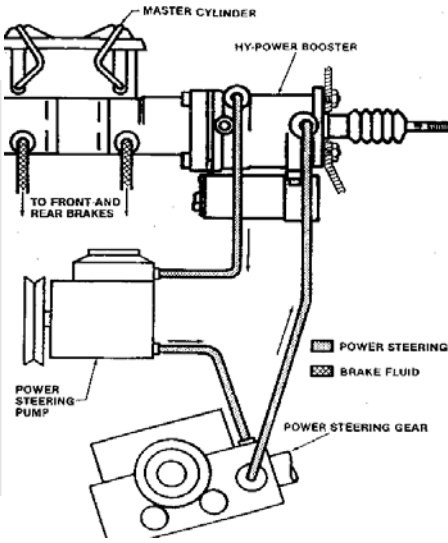

2. **Inspect** brake light warning device, electric brake motor warning light and electric brake motor operation. Refer to equipment standards that pertained to make and model year of vehicle when it was manufactured. ***Use information below as guidelines*.**

-with engine off and ignition off apply the brakes and **observe** brake warning light and listen for electric brake motor.

-1990- 91 **Blue Bird** in the early 90's used different systems.
-Some 1991 and 1992 **Blue Bird** chassis will activate only the electric brake motor.
-Some **1992 Blue Bird** chassis will activate brake warning light, warning chime and electric brake motor.
-1993 **Blue Bird** chassis will activate brake motor only - no warning lights.
-1999-**Bluebird** chassis will activate bell, red brake pressure light, "BRAKE SYSTEM". ABS is optional.
-2000-2002 **Bluebird** chassis will activate bell, red brake pressure light, "BRAKE SYSTEM" and amber ABS light.
-1996 - 2002 **GMC** chassis will activate only electric brake motor.
- All **IHC** chassis will activate electric brake motor only.
-1987- 1990 **Chevy** chassis will activate electric brake motor only.

**** OOS if electric motor brake light/buzzer is not observed when equipped to function or electric assist brake motor is inoperative.**

-with the engine off and ignition on, with or without brake application, **observe** brake warning light, brake electric motor light and listen for electric brake motor.

-Sept. 1990 Blue Bird chassis will activate brake warning light, warning chime, and electric brake motor.
-1992 **Blue Bird** chassis will activate brake warning light, warning chime, and electric brake motor.
-1993 **Blue Bird** chassis will activate brake warning light and electric brake motor will be running.

-1996 - 2002 **GMC** will activate warning bell without brake application. When brake is applied the electric brake motor will activate along with warning bell. When vehicle starts "AUX BRAKE" and "PRIMARY BRAKE" will flash and then go off to indicate bulbs are working.
-Before 5/7/1985 **IHC** electric brake will only operate when you apply pressure to the brake pedal. The "BRAKEPRESSURE" light will be operating with the key in the on position and engine off.
-with the engine off and ignition on, with or without brake application, **observe** brake warning light, brake electric motor light and listen for electric brake motor.
-Sept. 1990 Blue Bird chassis will activate brake warning light, warning chime, and electric brake motor.
-1992 **Blue Bird** chassis will activate brake warning light, warning chime, and electric brake motor.
-1993 **Blue Bird** chassis will activate brake warning light and electric brake motor will be running.
-1996 - 2002 **GMC** will activate warning bell without brake application. When brake is applied the electric brake motor will activate along with warning bell. When vehicle starts "AUX BRAKE" and "PRIMARY BRAKE" will flash and then go off to indicate bulbs are working.
-Before 5/7/1985 **IHC** electric brake will only operate when you apply pressure to the brake pedal. The "BRAKEPRESSURE" light will be operating with the key in the on position and engine off.
-After 5/7/1985- March 1987, **IHC** will activate brake pressure light and electric brake motor will be running.
-1987- 1990 **Chevy** will activate two lights indicating "BRAKE" and "BRAKE BOOST" along with the electric brake motor running and warning chime.

****OOS if brake warning light/buzzer, brake electric motor warning light is not observed when equipped to function or electric brake motor is inoperative.**

-with the engine on apply brakes and rock steering (note: do not turn wheel to steering stops).

****OOS if any brake warning light activates or loss of power steering occurs.**

Dual Power Hydraulic Brake System - These requirements apply in addition to the general section.

1. Visually and aurally **inspect**: hydraulic power booster, vacuum booster, vacuum reserve system.
-**observe** any fluid leaks and check condition of flow switch.

-dampness caused by fluid seeping, which is not visually detected when brakes are applied or steering action is occurring, is not a defect.

****OOS if fluid is leaking (if leak is detected, clean surfaces and with motor running, rock steering and apply brakes, check for persisting leak.**

****OOS if flow switch is disconnected or inoperative.**

****OOS if power steering fluid reservoir is empty.**

****OOS if any vacuum leak is detected.**

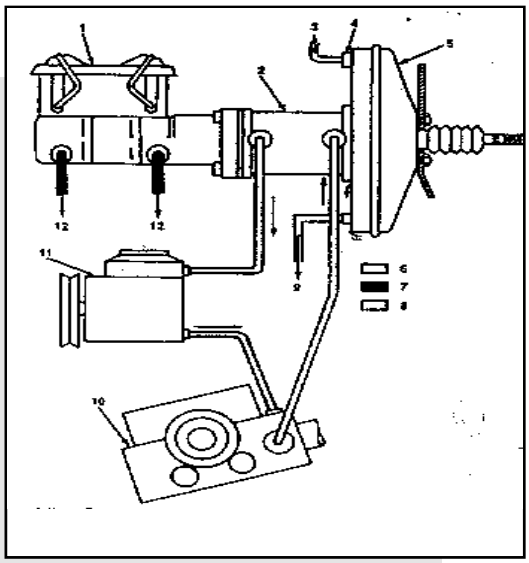

2. Visually and aurally **inspect** condition of brake warning light, low vacuum warning light/buzzer and vacuum gauge.
   -with engine running build full vacuum and turn motor off. **Observe** vacuum gauge.
   ****OOS if any observable vacuum leaks after initial shut down or up to two minutes there after (*rev. 11-25-98*).**

   -with vacuum built up, apply and hold brake for one minute.
   ****OOS if any observable vacuum leaks after initial brake application (*rev 11-25-98*).**

   -after checking above item, release brakes and apply two more times.
   ****OOS if vacuum reserve is not adequate for three full brake applications.**

   -after checking above item, **check** that the low vacuum warning light/buzzer is functioning when the vacuum gauge reads below eight inches Hg. (pump brakes if necessary and make sure ignition is in start position to view light or hear buzzer.
   -Mid 1980's **IHC**, the flow switch, pressure differential switch and low vacuum warning light all activate one warning light. To check the low vacuum warning light, deplete vacuum system and start bus. Light should stay on until vacuum reaches 8 inches of mercury. If light goes out immediately upon startup with vacuum depleted the low vacuum switch (mounted on inside of firewall, under dash) is inoperative.
   -1986 **Chevy** with key on and full vacuum will activate no lights. With low vacuum will activate sharp tone and low vacuum light. Upon start up you will observe low additional lights indicating "BRAKE" (differential switch) and "BRAKE BOOST" (flow switch).
   -OOS if vehicle is equipped with both low warning indicator and one is not functioning.

   ****OOS if no low vacuum warning indicator is functioning.**

   ****OOS if brake warning light is inoperative.**

   -after checking above item the vacuum system should be depleted. Depress brake pedal and hold. Start vehicle while depressing pedal. A surge should be felt in the brake pedal indicating an operating vacuum system.
   ****OOS if you do not feel the brake pedal surge.**

   -after feeling surge in brake pedal when the vehicle starts the brake pedal should travel farther to the floor indicating proper hydraulic assist. At this time a "throttling" noise will be heard.
   ****OOS if pedal does not travel farther to the floor and "throttling" noise not heard.**

Vacuum Brake System: These requirements apply in addition to the general section. Refer to Tr.300.31(3) & (4). Under 10,000 GVWR exemption of vacuum gauge, reserve tank and low vacuum waning device.

1. Visually and aurally **inspect** vacuum booster, and vacuum reserve system.
   ****OOS if any observable vacuum leaks.**

2. Visually and aurally **inspect** condition of low vacuum warning light/ buzzer and vacuum gauge. Brake warning light for pressure differential switch will also be present (see general section for inspection procedure).
   -with engine running build full vacuum and turn motor off. Observe vacuum gauge.
   **** OOS if any observable vacuum leaks after initial shut down and up to two minutes there after (*rev 11-25-98*).**

-with vacuum built up, apply and hold brake for one minute.

****OOS if any observable vacuum leaks after initial brake application (*rev. 11-25-98*).**

-after checking above item, release and apply brake two more times.

****OOS if vacuum reserve is not adequate for three full brake applications.**

-after checking above item, check that the low vacuum warning light is functioning when the vacuum gauge reads below 8 inches of Hg (pump brakes if necessary and make sure ignition is in start position to view light or hear buzzer).

****OOS if no low vacuum warning indicator is functioning.**

-after checking above item, the vacuum system should be depleted. Depress brake pedal and hold. Start vehicle while depressing pedal. A surge should be felt in the brake pedal indication an operating vacuum system.

****OOS if you do not feel the brake pedal surge.**

Hydro-Max (Bendix) Hydraulic Brake System (IHC- after March 1987 and Ford vehicles): These apply in addition to the general section .

1. Visually **inspect** master cylinder, hydraulic power booster, and on Ford vehicles check the Saginaw brake pump and associated components related to the parking brake system.

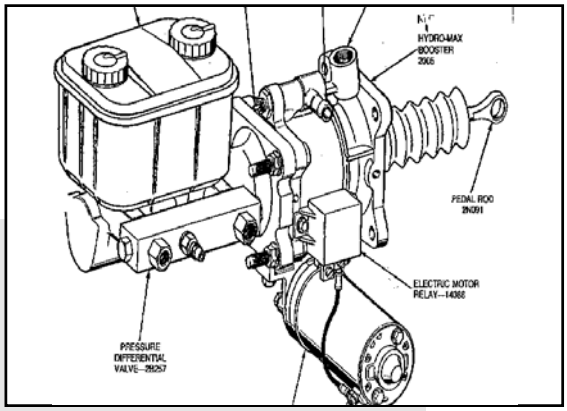

-observe any fluid leaks and check flow switch.

-dampness caused by fluid seeping, which is not visually detected when brakes are applied or steering action is occurring, is not a defect.

****OOS if fluid is leaking- if a leak is detected clean surfaces and with motor running rock steering and apply brakes. To check Ford's parking brake system the vehicle should be running with the brakes released. This will build pressure in the rear canisters.**

****OOS if flow switch is disconnected or inoperative.**

****OOS if Saginaw brake pump fluid reservoir is empty (Ford).**

2. **Inspect** brake warning device, electric motor warning light and electric brake motor.

-with the engine off and ignition off apply the brakes and observe electric brake motor warning light/ buzzer and listen for electric brake motor operation.

-IHC vehicles will activate electric brake motor only.
-Ford vehicles will activate electric brake motor warning light, buzzer, and electric brake motor.
-Nov. 1998 - 2006 Freightliner (Thomas C-2 body is on Freightliner chassis) vehicles will activate electric brake motor only and audible alarm.
-1995 **Thomas** chassis will activate brake motor only.
-2003 - 2006 Blue Bird will activate brake motor only.

****OOS if the electric brake motor warning light and buzzer or bell is inoperative or electric brake motor is inoperative when equipped to function.**

-with the engine off and ignition on with or without brake application observe brake warning light, brake electric motor light/buzzer and listen for electric brake motor operation.

-Mar 1987 -1991 IHC will activate brake pressure light and brake motor. No bell.
-1991-98 **IHC** will activate brake pressure light, bell, and electric brake motor. Oct. 1991 had two brake pressure warning lights.
-3/1/1999-2004 **IHC** will activate brake pressure light, ABS light, bell and brake motor.
-Nov. 1998 **Freightliner** vehicles will activate brake pressure light (!), buzzer, and electric brake motor. This is the new hydro-max system from Bendix. The light is a low fluid, differential switch, and flow switch indicator.
-1995 **Thomas** will activate warning buzzer, brake pressure light and electric brake motor.
-1998 **Thomas** will activate red brake pressure light, and audible alarm
-3/1/1999 - 2006 **Thomas**(Thomas C-2 body is on Freightliner chassis) will activate brake pressure light, audible alarm and ABS light
-2003 – 2006 **Blue Bird** will activate brake pressure light, audible alarm and ABS light

****OOS if the brake warning light or the brake electric motor light and buzzer (bell) inoperative or electric brake motor inoperative. (Majority of IHC systems have one light, Ford has two lights)**

-with the engine off and ignition on with or without brake application observe brake warning light, brake electric motor light/buzzer and listen for electric brake motor operation.

****OOS if the brake warning light and the brake electric motor light/buzzer inoperative or brake motor inoperative.**

-with the engine off and ignition on with the parking brake set, check the parking brake warning light.

-with the engine on apply brakes and rock steering (note: do not turn wheel to steering stops).

****OOS if any brake warning light activates or loss of power steering occurs.**

Hydro-Boost Hydraulic Brake System: (found mainly on GM and Ford one ton chassis) These requirements apply in addition to the general section .

1. Visually **inspect** master cylinder, hydraulic power booster and flow switch.

-**observe** any fluid leaks and check flow switch.

-1987 -1989 **Chevy** no flow switch.

-December of 1989 flow switch present in hydraulic hose coming from pump.

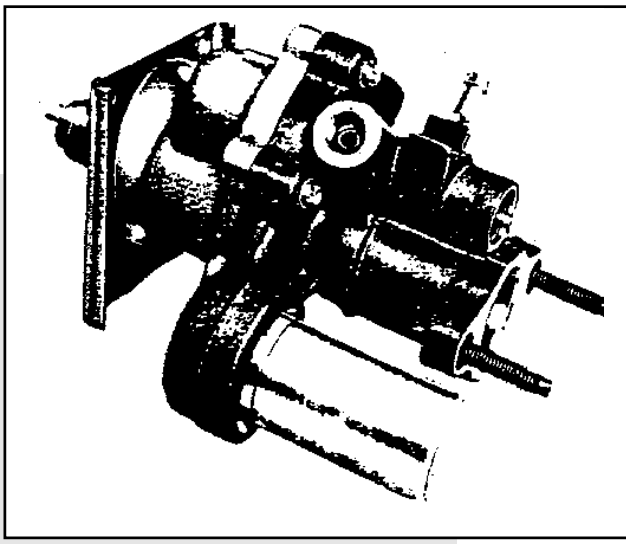

-dampness caused by fluid seeping, which is not visually detected when brakes are applied or steering action is occurring, is not a defect.

****OOS if fluid is leaking- if a leak is detected, clean surfaces and with motor running rock steering and apply brakes, check for persisting leak.**

****OOS if flow switch is disconnected or inoperative.**

****OOS if power steering fluid reservoir is empty.**

2. With engine off inspect condition of dual system by applying brakes several times until a hard brake pedal is felt. Apply and hold brake pedal. Start vehicle and the brake pedal should kick back indicating a properly working system.

****OOS if pedal does not kick back (check condition of Nitrogen canister).**

3. With engine off and ignition on, observe brake warning light.

****OOS if brake warning light is inoperative.**

4. With engine on, apply brakes and rock steering (note: do not turn wheel to steering stops.

****OOS if any brake warning light activates or loss of power steering occurs.**

Wabco/International Brake system Hydraulic Brake System (ICCO-International starting 2005):These apply in addition to the general section.

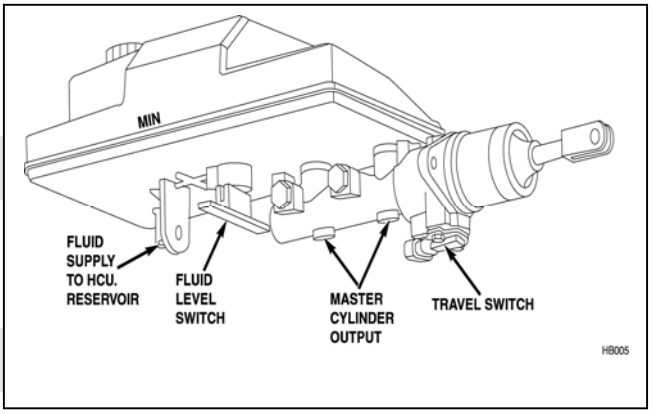

1. Visually **inspect** master cylinder, fluid level, fluid level switch, and travel switch.
   -observe any fluid leaks
   ****OOS if fluid is leaking**
   ****OOS if fluid level switch or travel switch is disconnected.**

2. **Inspect** pump motors. With engine off (key on or off) press brake pedal several times. Listen for pump motors to operate.
   ****OOS if motor does not run. (Located on left side frame rail behind axle 1)**

3. **Inspect** brake warning light. Turn key from off to on position. Instrument panel should light up and go off after approximately 5 seconds. Lights will not come on upon start up.

   ****OOS if brake pressure light or brake fluid light is inoperative.**

4. **Inspect** the powered parking brake.
   ****OOS if system has a fluid leak.**

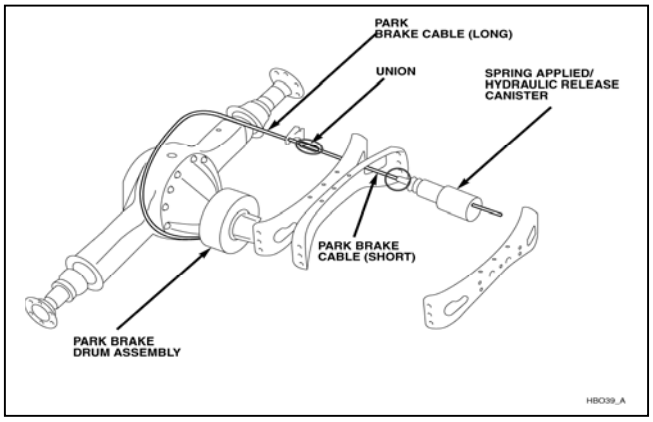

BUMPERS — TRANS 300.32

(1) The front bumper of type A-I, B, C or D buses shall have not less than an 8-inch face and shall extend between the frame rails as a minimum. The bumper shall be of sufficient strength and be positioned to permit pushing a vehicle of similar weight without distortion to the bumper, chassis, or body.

(2) The rear bumper of type A-I, B, C or D buses shall have not less than an 8-inch face and shall wrap around the rear corners of the body to a point at least 12 inches forward. The bumper shall be of sufficient strength and shall be positioned to permit the bus to be pushed without distortion to either the bumper or the bus body. There shall be no more than ½ inch space between the bumper and the body. Protective material may be utilized to fill all or part of the required ½ inch space.

(3) Type A-II buses shall be equipped with bumpers on the front and on the rear.

INSPECT/DEFECTS- **BUMPERS** — TRANS 300.32

1. If type A-I, B, C, or D bus, **check** that the front bumper has a face of 8" or more and that it extends at least between the frame rails; and that the rear bumper has a face of 8" and wraps at least 12" forward around the rear corners. Measure the distance between the rear bumper and the body.

****OOS if missing front or rear bumper.**

2. If a type A-II bus, **check** that bus has both front and rear bumper.

****OOS if missing front or rear bumper.**

CAPACITY—TRANS 300.33

(1) The passenger capacity of a school bus shall be determined by the following standards: (a) Pupils through the 12th grade shall be allotted 13 inches of seating space. (b) Each wheelchair location shall be counted as one seating position.

(2) There shall be displayed on the inside of the bus directly over the windshield on the right side a sign indicating the maximum pupil passenger capacity. The size of the letters and numerals shall be large enough to permit them to be read by passengers. Transportation of passengers in excess of the number designated on the sign or of the actual seat measurement is prohibited.

(3) The total available seating capacity per seat shall determine the capacity of the bus. Fold down or fold up seats or reclining seats are not be permitted except that at side emergency door locations, a "flip-up seat" may be used. The "flip-up seat" shall conform to the following requirements: (a) The "flip-up seat" shall be designed and constructed to inhibit passenger limbs from becoming lodged between the seat cushion and seat back. (b) The working mechanism under the seat shall be covered to eliminate any tripping hazard. (c) The bottom of the "flip-up seat" shall be covered with sheet metal or other material of equal strength and durability and any sharp edges padded to prevent injury or snagging of clothing. (d) The seat shall be designed and constructed to rise to a vertical position automatically when not occupied.

(4) All passengers aboard a school bus shall be seated in a permanently mounted seat. This subsection does not apply to persons transported in wheelchairs or in other devices where special care is required.

INSPECT/DEFECTS- **CAPACITY**—TRANS 300.33

1. Check that bus has, as a minimum, 13" of seating space for each pupil (as determined by sign displayed above right windshield). Wheelchair positions count as one space.

2. **Check** that a readable sign indicating maximum number of pupils is displayed on the inside of the bus directly over the right windshield.

INSPECT/DEFECTS- **CAPACITY**—TRANS 300.33 (Continued)

3. If equipped with a flip-up seat, **check** that location is at a side emergency door and that the design and construction prevents limbs from getting caught between seat cushion and back. **Check** that mechanism under seat is covered. **Check** that bottom of seat is covered with sheet metal or equally strong material and any sharp edges padded. **Check** that seat rises automatically to vertical position when not occupied.

****OOS if equipped with fold-down, fold-up, or reclining seats or if equipped with a flip-up seat anywhere other than at side emergency door.**

****OOS if flip-up seat allows limbs to become lodged.**

****OOS if flip-up seat working mechanism under seat is not covered.**

****OOS if flip-up seat bottom is not covered with durable material or has any sharp edges.**

****OOS if it does not automatically rise when not occupied.**

COLOR — TRANS 300.34

(1) All school buses shall be painted national school bus glossy yellow with the exception of the trim, grill, wheels and the bumpers. Grills and wheels may be chrome, black, yellow, silver, or gray.

(2) When painted, the bumper shall be painted black.

(3) The following are designated as trim and shall be painted black: (a) Rub rails. (b) Stop arm mounting brackets.

(4) The following may be designated as trim or body components and if painted shall be either black or yellow: (a) Door handles. (b) Grab handles. (c) Window sash, seals, gaskets, and bands on exposed edges. (d) Door seals and gaskets. (e) Mirror frame and mounting brackets. (f) Lamp flanges, housings, and an area around the tail lamps or combination stop and turn lamps not to exceed 3 inches. Areas adjacent to rub rails may exceed 3”to the extent of the width of the rub rail. (g) Reflector frames and flanges. (h) Windshield wiper arms. (i) Snow rails. (j) License frame and mounting brackets (k) Service Door, (l) Engine hoods may be matte black or lusterless yellow for glare reduction.

(5) The body manufacturer's name, including a logo may appear on the exterior of the vehicle in any color.

(6) Non-contrasting reflective material is permitted to include, but not limited to, rub rails, snow rails as "school bus" lettering and the owner's identification as required in Trans 300.61(6) or permitted in Trans 300.61(7). Front or rear bumper, or both, may be marked diagonally 45 degrees down to centerline of pavement with 2-inch wide strips of non-contrasting reflective material.

(7) Yellow reflective tape may be located on the rub rail in areas of emergency exit windows in order to meet requirements of FMVSS 217.

See Trans 300.61(7).

INSPECT/DEFECTS- COLOR — TRANS 300.34

1. Check correctness of color *to include* that: grill is chrome, black, yellow, silver, or gray • if painted, the bumper is black • bus body is painted National School Bus Glossy Yellow • rub rails and stop arm mounting brackets are black • if painted — door handles; grab handles; window sashes, seals, gaskets, and bands on exposed edges; door seals and gaskets; mirror frame and mounting brackets; lamp flanges, housings, and an area round the 7" tail lamp or combination stop and turn lamps not to exceed 3"; reflector frames and flanges, windshield wipe arms; snow rails, and license frame and mounting brackets — shall be painted either black or yellow. **Note**: Refer to 300.61(7).

CONSTRUCTION — TRANS 300.35

(1) The construction shall be of prime commercial quality steel or other metal or material with strength at least equivalent to all-steel, as certified by the bus body manufacturer, except for the grill, hook, or fenders and shall comply with FMVSS 220, school bus rollover protection. Type A-I, B, C or D school buses shall comply with FMVSS 221, school bus body joint strength.

(2) The construction shall provide a reasonably dust proof and weather tight unit. Openings between the chassis and passenger compartment shall be sealed to prevent fumes or exhaust gas from entering the bus body.

(3) The floor or sub-floor shall be of prime commercial quality steel of at least 14 gauge or material with strength at least equivalent to all-steel, as certified by the bus body manufacturer. Plywood may be used in addition to other flooring material. The floor shall be level from front to back and from side to side except in the wheel housing, toe-board, and driver's seat platform areas. The body cross-members below the floor may have no more than 2 consecutive and no more than 3 total members that are completely rusted through.

(4) For type A-I, B, C or D buses, all joints within bus bodies which employ discrete fasteners, specifically those which join panels to panels, shall achieve a significant portion of the strength of the parent metal, so that all available panel materials are capable of serving as part of the structure.

(5) All metal used in construction of the bus body shall be zinc- or aluminum-coated or treated by an equivalent process before the bus is constructed. Included are such items as structural members, inside and outside panels, floor panels and floor sill. Excluded are the door handles, grab handles, stanchions, interior decorative parts, and other interior plated parts.

(6) Annually between December 1 and December 15, each school bus manufacturer shall certify to the department that all school buses manufactured for sale in Wisconsin in the following calendar year will comply with this section. The certification shall be filed in the division of state patrol. The certification may be addressed to the administrator, division of state patrol, PO Box 7912, Madison, WI 53707-7912.

(7) Each school bus body manufacturer shall stamp the letters "WI" either preceding or following the body identification number to indicate that the bus body was built to meet Wisconsin school bus construction standards. The school bus body manufacturer shall furnish to the department a blueprint indicating the size and placement of "WI" requirement on its buses to be sold in Wisconsin. A sample plate shall be furnished by the manufacturer to the division of state patrol showing the placement of "WI". This subsection does not apply to vehicles in use as school buses in Wisconsin prior to March 1, 1979.

(8) The owner of any vehicle previously marked, registered, or titled in another jurisdiction as a school bus shall, prior to using the vehicle for any pupil transportation in Wisconsin, submit the vehicle for department inspection and approval as provided by Trans 300.13(3). In addition, the owner shall provide proof satisfactory to the Division of State Patrol that the vehicle is constructed in compliance with this section.

INSPECT/DEFECTS- CONSTRUCTION — TRANS 300.35

1. **Check** that construction is of prime commercial quality steel or other metal.

2. **Check** that body construction provides a dustproof and weather tight unit and that openings between the chassis and passenger compartment are sealed to prevent fumes or exhaust from entering the bus

****OOS if any opening allows fumes or exhaust into the bus body.**

3. **Check** that the body cross members below the floor have no more than 2 consecutive or 3 total members that are completely rusted through or cracked.

****OOS if 2 consecutive or any 3 total cross members are completely rusted through or cracked.**

4. For all buses manufactured since March 1, 1979, **check** that the letters "WI" either precede or follow the body identification number.

****OOS if manufactured March 1, 1979 or later and not having the letters "WI" either preceding or following the body identification number.**

CROSSING GATE-- TRANS 300.355

(1) All school buses shall have a crossing gate installed by May1,2004.

(2) The crossing gate shall be mounted on the right side of the front bumper and shall open to 90 degrees.

(3) The crossing gate shall meet or exceed SAE J1133. The crossing gate shall be constructed of noncorrosive or nonferrous material or treated in accordance with body sheet metal specifications and shall have no sharp edges or projections that could cause hazard or injury to students. The color may be yellow, black, silver or gray.

(4) The crossing control arm shall extend a minimum of 70 inches, measured from the bumper at the arm assembly attachment point, when in the extended position. The arm shall extend simultaneously with the stop arm by means of the stop arm controls.

(5) An automatic recycling interrupt switch may be installed for temporary disabling of the crossing control arm. An electromagnetic device may be installed to stabilize the arm when in the stored position.

INSPECT/DEFECTS- **Crossing Gate** — TRANS 300.355

1. **Check that the crossing gate is functioning properly.**

****OOS if missing.**

****OOS if not mounted correctly or does not extend to approximately 90 degrees.**

****OOS if it does not extend out with stop arm controls.**

****OOS if equipped with other than an automatic recycling interrupt switch.**

DEFROSTER -- TRANS 300.36

(1) The defrosting system shall have the capacity to keep the windshield, the window to the left of the driver and the glass in the service door clear of fog and frost. The defroster outlets shall not be restricted in any way.

(2) Fans may be used in addition to defrosters, but shall be mounted so as not to obstruct the driver's view.

(3) Any exposed fan blade shall have a shroud.

(4) The defrosting system shall conform to SAE standards J391 and J382.

INSPECT/DEFECTS- **DEFROSTER** -- TRANS 300.36

1. **Check** that the defrosting system is functioning properly — that the window to the left of the driver and the glass in the service door clear of fog and frost.

****OOS if view is obstructed by fog or frost.**

****OOS if inoperative and conditions restrict visibility.**

2. **Check** that a mounted fan does not obstruct the driver's view.

****OOS if visibility is obscured.**

3. **Chec**k that exposed fan blades are protected with a shroud.

****OOS if fan blade is exposed.**

DRIVE SHAFT — TRANS 300.37

(1) Each segment of the drive shaft more than 18 inches long shall be equipped with a suitable guard to prevent an accident or injury in the event of its fracture or disconnection. This section does not apply to type A-II school buses manufactured in a single stage.

(2) The universal joints and the center bearing of every bus subject to inspection shall not be loose or worn.

INSPECT/DEFECTS- **DRIVE SHAFT** — TRANS 300.37

1. **Check** drive shaft, guards and universal joints.

2. **Check** center bearing. *When checking bearing, make sure any play is in the bearing itself and not in the rubber webbing.*

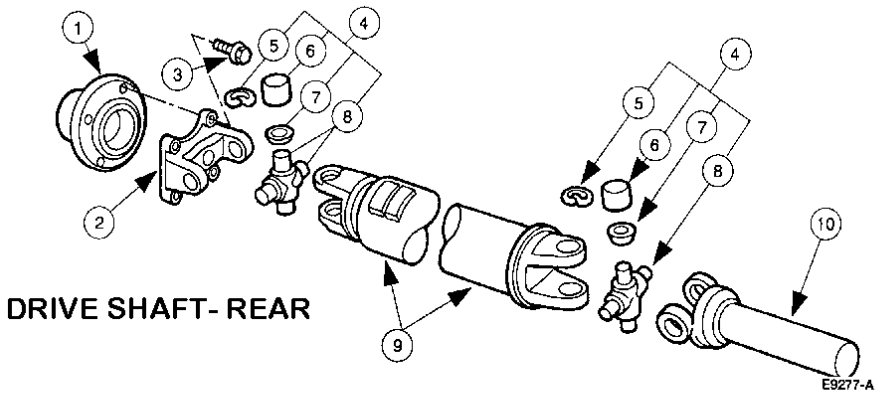

	Description
1	Driveshaft Rear Axle Companion Flange
2	Driveshaft Flange Yoke
3	Driveshaft Flange Yoke to Driveshaft Rear Axle Companion Flange Bolt
4	Rear Axle Shaft Universal Joint (U-Joint)

	Description
5	Snap Ring (Part of 4635)
6	Bearing (Part of 4635)
7	Seal (Part of 4635)
8	Spider (Part of 4635)
9	Driveshaft
10	Driveshaft Slip Yoke

(Continued)

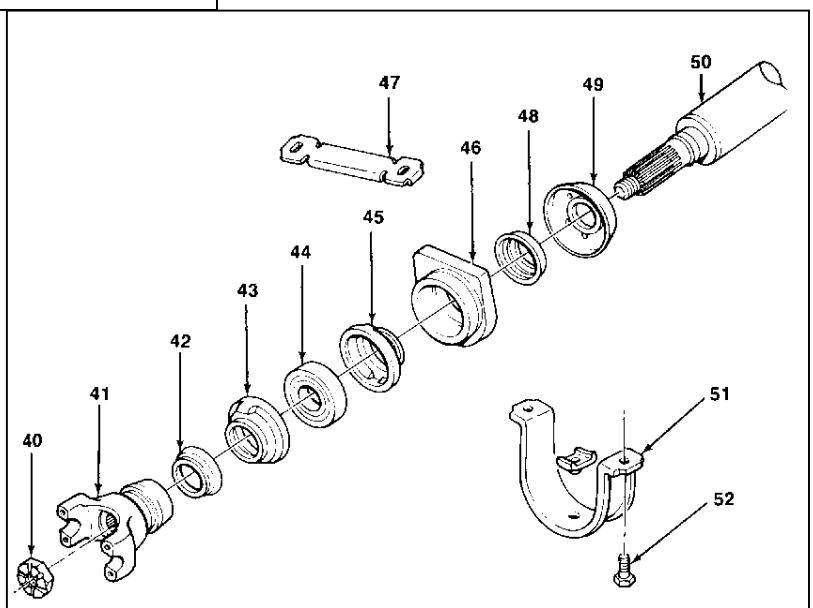

40. Nut
41. Yoke
42. Slinger
43. Grease Retainer
44. Center Bearing
45. Grease Retainer
46. Rubber Cushion
47. Retainer
48. Slinger
49. Dust Shield
50. Propeller Shaft
51. Bracket
52. Mounting Bolts

EMERGENCY WARNING EQUIPMENT — TRANS 300.38

(1) Each school bus shall be equipped with 3 bi-directional emergency triangles. Oil burning pot flares shall not be carried on a school bus.

(2) All emergency equipment shall be kept in suitable fasteners or containers in a readily accessible place in the driver's compartment. The container or units shall be secured to the bus.

(3) Emergency equipment may be locked or kept in a locked compartment provided it is not locked when passengers are being transported.

(4) This section shall not preclude the carrying of additional emergency equipment.

INSPECT/DEFECTS - EMERGENCY WARNING EQUIPMENT — TRANS 300.38

1. **Check** that equipment is mounted in the driver's compartment.

2. **If it is a presale inspection**, make note that the equipment is missing and must be installed prior to use as a school bus, but do not reject.

EMERGENCY EXITS — TRANS 300.39

(1) Each school bus shall have emergency exits that comply with 49 CFR 571.217 and FMVSS 217, bus window retention and release, and the following requirements. If a left side emergency door is utilized, there shall also be an emergency exit window in accordance with sub. (8), located in the back of the bus. A window by itself does not meet this requirement for an emergency exit.

(2) Required emergency exits shall be designed to be opened from both the inside and the outside of the bus. Side emergency exit windows are exempt from this requirement.

(3) There may not be any obstructions in the aisles or inside of the door that would delay or hinder an orderly use of the emergency exit. Articles transported on non-occupied seats inside the bus shall be secured.

(4) Steps leading to an emergency door are prohibited.

(5) The upper and lower portion of the central rear emergency door shall be equipped with approved safety glass, the area of which shall be not less than 400 square inches in the upper portion and not less than 280 square inches in the lower portion. Van type buses are exempt from the requirements to have glazing in the lower part of the door. The left side emergency door shall be equipped with safety glass in the upper portion and the lower portion shall be of at least the same gauge metal as the body. The emergency door shall be hinged on the right side if it is in the rear of the bus and on the front side if it is in the left side and shall open only outward. Control of the emergency door from the driver's seat shall not be permitted.

(6) The emergency doors shall be equipped with a slide bar, cam-operated latch which shall have a minimum stroke of one inch. The latch shall be equipped with an electric plunger-type switch connected with a distinctive signal audible to the driver, shall be automatically operated, shall clearly indicate the unlatching of the emergency door and may not have a cutoff switch installed in the circuit. The switch and its activating plunger shall be enclosed in a case, which will prevent tampering, and wires leading from the switch shall be concealed in the body. The switch shall be so installed that the plunger contacts the farthest edge of the slide bar in such a manner that any movement of the slide bar will immediately close the circuit and activate the signal. The door latch shall be equipped with an interior handle that shall be capable of quick release but shall be protected against accidental release. The handle shall lift up to release the latch. The outside handle shall be such as to minimize hitching and shall be securely attached.

(7) If locks are installed on the emergency door they shall include a device to prevent the activating of the starter mechanism of the bus engine while any door is locked. An audio alarm shall indicate to the driver when any door lock is in the locked position while the ignition switch is in the "on" position. Any locking device on a school bus manufactured after July 1, 1977 or installed on any school bus after July 1, 1977 shall comply with these requirements.

(8) A rear emergency window at least 16 inches in height and as wide as practicable shall be provided in any bus where the emergency door is not in the rear. It shall be hinged at the top and designed to prevent accidental closing in an emergency. A positive latch on the inside of the window shall provide for quick release, but offer protection against accidental release. The outside handle shall be non-detachable and designed to minimize hitching.

EMERGENCY EXITS — TRANS 300.39(Continued)

(9) The inside of each emergency window shall have the designation “Emergency Exit”. An emergency door shall be identified with either the words “Emergency Exit” or “Emergency Door” on the inside at the top of, or above the door. Concise operating instructions shall be located within 6 inches of the release mechanism. When a release mechanism is not located within an occupant space of an adjacent seat, a label that indicates the location of the nearest mechanism shall be placed within that occupant space. The outside of the emergency door shall be clearly marked “Emergency Door” or “Emergency Exit” in letters 2 inches high at the top of, or above the door or immediately below the upper glass. An arrow at least 6 inches long and ¾ inch in width indicating the direction the release mechanism should be turned to open the door shall be painted in black on the yellow background. The outside of the emergency window shall be labeled “Emergency Exit” in letters at least 2 inches high, directly above the window or on the window glazing. There may not be any labeling on the glazing indicating emergency door. Labeling or operating instructions may be located on the glazing of emergency window exits as long as the labeling or instructions are clearly visible inside and outside the vehicle.

(10) A distinctive audible signal automatically operated shall clearly indicate to the driver the unlatching of any emergency window and no cut off switch shall be installed in the circuit.

(11) The area on the inside above the emergency door shall be covered with padding at least 2 inches high the entire width of the door opening.

(12) If the bus has a side emergency door, there shall be a clear, unrestricted area to permit an exit aisle of 12 inches from the center aisle of the bus without having to go over any obstructing seat. The 12-inch measurement may be taken at any position from floor to roof. The intent of this subsection is to provide a 12-inch unrestricted aisle to and through the side emergency door.

(13) Type A-II buses manufactured in 2 stages shall provide emergency exits as required for larger vehicles.

(14) In addition to side and rear emergency exits, doors, or windows, one or more roof hatches may be installed provided they meet all requirements specified in FMVSS 217. In addition to the audible warning required on emergency doors by FMVSS 217, additional emergency exits shall be likewise protected as indicated in s. Trans 300.39(10).

INSPECT/DEFECTS- **EMERGENCY EXITS** — TRANS 300.39

1. Inspect each school bus manufactured after 3-1-1995 for proper number of emergency exits based on applicable 49 CFR 571.217 and FMVSS 217.

Reference:

S5.2.3 **School buses.** Except as provided in S5.2.3.4, each school bus shall comply with S5.2.3.1 through S5.2.3.3.

S5.2.3.1. Each school bus shall be equipped with the exits specified in either S5.2.3.1(a) or S5.2.3.1(b), chosen at the option of the manufacturer.

(a) One rear emergency door that opens outward and is hinged on the right side (either side in the case of a bus with a GVWR of 10,000 pounds or less), and the additional exits, if any, specified by Table 1.

(b) One emergency door on the vehicle's left side that is hinged on its forward side and meets the requirements of S5.2.3.2(a), and a push-out rear window that provides a minimum opening clearance 41 centimeters high and 122 centimeters wide and meets the requirements of S5.2.3.2(c), and the additional exits, if any, specified by Table 2.

TABLE 1

Seating capacity	Additional exits required*
1-45	None.
46-62	1 left side exit door or 2 windows.
63-70	1 left side exit door or 2 windows, and 1 roof exit.
71 and above.	1 left side exit door or 2 exit windows, and 1 roof exit, and any combination of door, roof, or window such that the total capacity credit specified in Table 3 for these exits, plus 70, is greater than the seating capacity of the bus.
*Side emergency exit doors must meet the requirements of S5.2.3.2(a), emergency roof exits must meet the requirements of S5.2.3.2(b), emergency window exits must meet the requirements of S5.2.3.2(c).	

TABLE 2

Seating capacity	Additional exits required*
1-57	None.
58-74	1 right side exit door or 2 windows.
75-82	1 right side exit door or 2 windows, and 1 roof exit.
83 and above.	1 right side exit door or 2 windows, and 1 roof exit, and any combination of door, roof, or windows such that the total capacity credit specified in Table 3 for these exits plus 82 is greater than the capacity of the bus.
*Side emergency exit doors must meet the requirements of S5.2.3.2(a), emergency roof exits must meet the requirements of S5.2.3.2(b), emergency window exits must meet the requirements of S5.2.3.2(c).	

1. **Inspect** emergency exits to assure that required number of emergency exits are installed.

****OOS if minimum number required is not present.**

2. **Inspect** inside quick release mechanism and hold open device (3-1-1995) on emergency door.

****OOS if door release mechanism fails to function positively when activated from both inside and outside of the bus or if it opens accidentally or too easily.**

****OOS if door binds or is difficult to open (**reference- could a small child open the door?**)**

3. Check length of stroke on slide bar cam-operated lock.

4. **Check** function of buzzer indicating that the door is not fully closed.

****OOS if buzzer fails to function when slide bar is moved.**

5. If equipped with emergency door lock, attempt to start vehicle with door locked to **check** interlock function.

****OOS if vehicle starts or buzzer does not sound when switch is in the "ON" position.**

****OOS if no override**.

****OOS if any other lock installed without an override system.**

6. **Check** for padding above door.

7. **Check** for proper labeling and of emergency door and emergency windows.

8. **Check** that the emergency door is identified with the words "Emergency Exit" or "Emergency Door" on the inside at the top of, or above the door.

****OOS if "emergency exits" or "emergency doors" are not identified**.

9. Check that emergency exits are outlined with retroreflective tape on all school buses manufactured after 3 -1 -1995.

Note: Each opening for a required emergency exit shall be outlined around its outside perimeter with a retroreflective tape with a minimum width of 2.5 centimeters and either red, white, or yellow in color, that when tested under the conditions specified in S6.1 of Standard No. 131 (49 CFR *571.131*), meets the criteria specified in Table 1 of that section.

10. **Check** for free operation of all emergency exit windows and roof hatch if so equipped.

****OOS if emergency windows / roof hatches do not operate freely or at all.**

11. **Check** for audible alarm for emergency exit windows and for roof hatch if so equipped.

****OOS if signal does not operate or there is a cutout in the circuit. (**Windows- Effective 1-1-83**)**

****OOS if locking system with no audio alarm installed.**

****OOS if installed with roof hatches, does not have alarm or alarm is inoperative. (**Effective 3-1-95**)**

12. For rear window emergency windows, **check** for proper height, hinging and latching.

****OOS rear emergency window with less than 16" in height opening.**

****OOS if not hinged at the top and does not remain open at an angle of at least 45 degrees.**

****OOS if it does not properly latch.**

13. **Check** for unobstructed 12" of aisle to emergency doors, and that any articles transported on non-occupied seats are secured.

****OOS if passageway to any emergency door is blocked.**

INSPECT/DEFECTS- **EMERGENCY EXITS** — TRANS 300.39 (Continued)

****OOS if articles are transported on non-occupied seats and are unsecured.**

14. **Check** Emergency Exits for type A-II buses.

****OOS if "emergency exit" standards on A-II school buses manufactured in two stages are not met.**

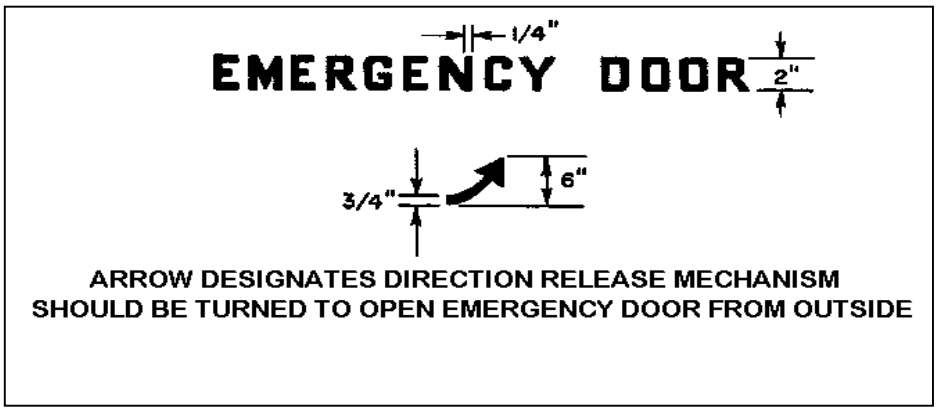

EXHAUST SYSTEM — TRANS 300.40

(1) The exhaust system that includes the exhaust manifolds, joining gaskets, piping leading from the exhaust manifold, muffler and tail pipe may not enter the bus body at any location. The exhaust system pipes shall be of nonflexible steel except that those buses that utilize a diesel engine may be equipped with a flexible pipe of not more than 18 inches long between the engine and the first exhaust pipe hanger. Stainless steel bellows assemblies are allowed.

(2) An exhaust system that has its exit on the left side shall have the exit point located no further forward than behind the driver's position. (Operation in Intrastate only.)

(3) An exhaust system that has its exit on the right side shall have the exit point located behind the rear wheels. (Operation in Intrastate only.)

(4) An exhaust system that exits at the rear shall extend to, but not beyond, the rear limit of the bumper.

(5) Every exhaust system exit shall extend to, but not over one inch beyond the body limits of the bus. The exhaust shall be directed to prevent an accumulation of exhaust gases underneath the bus.

(5m) Buses equipped with diesel engines may be equipped with a turndown exhaust pipe. The turndown exhaust pipe may not exceed 6 inches forward of the rearmost part of the bus.

(6) The complete exhaust system shall be tightly connected and free from leaks.

(7) All emission control systems, components and parts shall be maintained in accordance with manufacturer's specifications.

(8) School buses operated in interstate commerce shall comply with 49 CFR 393.83, exhaust system location.

INSPECT/DEFECTS- **EXHAUST SYSTEM** — TRANS 300.40

1. Visually **inspect** mufflers, resonators, catalytic converters, tail pipes, exhaust pipes and supporting hardware.
   -inspect for presence and condition- i.e. rusted/ corroding/pinched/loose.

   **** OOS if sufficient exhaust leak (i.e. 3" in diameter hole or greater with a gasoline, LNG, CNG, or LPG powered vehicle)**

   ****OOS if a leak is present and a hole is evident in the passenger compartment. (All fuel types)**

2. **Check** that exhaust pipes exiting on the left are to the rear of the driver position and exhaust pipes exiting on the right are behind the rear wheels.

   ****OOS if tail pipe does not extend to outside of the body line. (Gasoline, LNG, CNG and LPG powered vehicles only.)**

   ****OOS if improper exhaust exiting location.**

FIRE EXTINGUISHER — TRANS 300.41

(1) Each bus shall be equipped with a fire extinguisher mounted in full view in the driver's compartment or mounted inside a compartment in the driver's area if the compartment is in plain view and is labeled "Fire Extinguisher" in red letters to indicate its location.

(2) The fire extinguisher may be locked or kept in a locked compartment provided it is not locked when passengers are being transported.

(3) Any fire extinguisher purchased after July 1, 1977, or utilized on a bus that was manufactured after January 1, 1978, shall utilize dry powder or Halon 1211. The fire extinguisher shall be 10 BC rating or a combination of 2 extinguishers with a total of at least 10 BC rating. Any bus manufactured after January 1, 1984, shall use only a single extinguisher.

(9) Each extinguisher shall be kept fully charged and sealed.

INSPECT/DEFECTS- FIRE EXTINGUISHER — TRANS 300.41

1. **Check** for presence, location, and readiness of the fire extinguisher and that it is a dry chemical type or Halon and is sealed.

   **** OOS if missing or not properly charged. An overcharged extinguisher is not a violation. (Exception: Pre-sale inspection)**

2. If carriage type, **check** to see if cartridge has been punctured.

3. If stored in a compartment, **check** that it is labeled as "fire extinguisher".

FIRST AID KIT — TRANS 300.42

(1) Each school bus shall carry a first aid kit. The container shall be moisture-proof and dustproof and of rigid construction. The kit shall be mounted in full view in the driver's compartment, or it may be placed in an enclosed unlocked compartment in the driver's area providing the compartment is labeled "FIRST AID KIT" or marked with a "red" cross emblem in plain view indicating the location of the kit. The kit shall be removable without the use of any tools or keys.

FIRST AID KIT — TRANS 300.42(Continued)

(2) School buses shall carry a 16-unit kit or larger containing at least the following items:

Adhesive bandage, ...1-inch ..... 2 packets
Bandage compress, ……....2-inch ..... 2 packets
Bandage compress, ...4-inch ..... 4 packets
Gauze bandage, ...……..4-inch ..... 2 packets
Gauze compress, ...……...3-inch x 3 inch .....2 packets
Gauze compress, ...24-inch x 24-inch minimum .....……1 packet
Triangular bandage, ...40-inch ..... 2 packets
Wire splint, ...1 packet

(3) All units shall be sanitized packages.

INSPECT/DEFECTS- FIRST AID KIT — TRANS 300.42

1. **Check** for presence of and general condition of first aid kit.

2. **Check** for proper contents.

FENDERS — TRANS 300.43

Each school bus shall provide protection from debris thrown by the tires by the use of fenders or body construction. The tire tread shall be within the fender or body construction.

INSPECT/DEFECTS- FENDERS — TRANS 300.43

1. **Check** that tire does not protrude outside of body line.

**** OOS if fender is missing.**

****OOS if fender has projecting parts.**

FLOOR COVERING — TRANS 300.44

(1) The floor in the under seat, driver's compartment, step-well and the toe-board areas, including the tops of the wheel housings, shall be covered with a fire-resistant material.

(2) Type A-II buses shall have the floor covering secured so it cannot shift. The edges and seams shall be secured. The covering shall be of a slip resistant material.

(3) Type A-I, B, C or D school buses shall have floor covering on the total floor area. The aisle, step-well and entrance shall be of slip resistant rubber type material or equivalent material as certified by the manufacturer, when either wet or dry. The covering may not be cracked and shall be securely bonded or fastened to the floor. All seams shall be sealed.

INSPECT/DEFECTS- FLOOR COVERING — TRANS 300.44

1. For school buses, **check** that floor covering is slip resistant, that edges and seams are secured and cannot shift or create a trip hazard.

****OOS if a trip hazard is present.**

FRAME — TRANS 300.45

(1) Alterations to the frame side members may only be made by the chassis or body manufacturer.

(2) Holes shall not be permitted except where originally provided in the chassis frame. There shall be no welding to the frame except by the chassis or body manufacturer.

INSPECT/DEFECTS- FRAME — TRANS 300.45

1. **Check** frame and cross members for cracks, holes, distortions, alterations, and improper welds not completed by chassis or body manufacturer.

**** OOS if frame components are cracked, welded, etc (except welds from the original manufacturer)**

FUEL TANK AND FUEL SYSTEM INTEGRITY — TRANS 300.46

(1) All fuel systems and tanks must be maintained free of leaks. The fuel tank shall be attached to the bus in a manner that prevents any movement of the tank while the bus is in motion.

(2) All fuel lines shall be secured in a manner that will prevent wear.

(3) The filler pipe or device shall be located so that the fuel, if spilled or overfilled, will not drip or drain on any part of the exhaust system.

(4) Every fuel system shall be properly vented to prevent any accumulation of fumes.

(5) The fuel systems and tanks shall meet FMVSS 301, fuel system integrity and all other federal and state standards and regulations applicable for the type of fuel used at the time of manufacture.

INSPECT/DEFECTS- FUEL TANK AND FUEL SYSTEM INTEGRITY — TRANS 300.46

1. Visually **examine** the fuel tank, fuel tank support straps, filler tube, tube clamps, fuel tank vent hoses or tubes, filler housing drain, overflow tubes and filler cap.

**** OOS if any part of the system is not securely fastened or supported.**

**** OOS if there is fuel leakage at any point in the system.**

**** OOS if the fuel filler cap is missing.**

**** OOS if tank missing protection cage or defective.**

HEATERS — TRANS 300.47

(1) An inside temperature of not less than 50 degrees Fahrenheit at average minimum January temperatures as established by the U.S. department of commerce, weather bureau, for the area in which the bus is to be operated shall be maintained throughout the bus.

(2) The heater hose shall be adequately supported to guard against excessive wear or abrasion and may not interfere with or restrict the operation of any engine function. Heater lines inside the passenger compartment shall be shielded to prevent accidental contact by the driver or passengers.

INSPECT/DEFECTS- HEATERS — TRANS 300.47 (Continued)

1. **Inspect** heater(s) for capability to maintain inside temperature of 50 degrees F.

**** OOS if heater can't maintain temperature of 50 degrees.**

2. **Inspect** for leakage and general condition of heating system, including hoses and hose shielding.

HORN — TRANS 300.48

Every bus used to transport pupils shall be equipped with a horn in good working order and capable of emitting a sound audible under normal traffic from a distance of not less than 200 feet.

INSPECT/DEFECTS- HORN — TRANS 300.48

1. **Check** for the mounting of and the operation of the horn.

**** OOS if horn is inoperative or is missing.**

INSIDE HEIGHT — TRANS 300.49

(1) The inside height of the school bus shall be 72 inches or more, measured metal to metal, at any point on longitudinal center line from front vertical bow to rear vertical bow.

(2) Type A-II school buses need not comply with this section.

INSPECT/DEFECTS- INSIDE HEIGHT — TRANS 300.49

1. Check that interior height is 72 inches or more on the centerline (exception Type A-II.

**** OOS if not 72 inches or more.**

INSULATION — TRANS 300.50

The ceilings and walls of buses manufactured in 2 stages and all type A-I, B, C or D buses shall be insulated to reduce heat and cold transfer.

INSPECT/DEFECTS- INSULATION — TRANS 300.50

Cannot be checked during a customary inspection.

INSTRUMENTS, GAUGES — TRANS 300.51

(1) Every school bus shall be equipped with the following illuminated instruments to indicate malfunctions or gauges to indicate a measure or capacity:

(a) Air pressure or vacuum, where air or vacuum brakes are used with low energy supply warning systems.
(b) Ammeter or voltmeter.
(c) Fuel gauge.
(d) Odometer and speedometer.
(e) Oil pressure.
(f) Coolant temperature.

(2) All instruments and gauges shall be in operating condition and shall be mounted so as to be clearly visible to the seated driver.

INSPECT/DEFECTS- INSTRUMENTS, GAUGES — TRANS 300.51

1. **Check** all instruments and gauges. (*Indicator lights may be used for ammeter, oil pressure and water temperature in lieu of gauges*.)

INTERIOR — TRANS 300.52

(1) Every school bus shall have a fire resistant inner lining on the ceilings and walls. The interior rearward metal panels shall be lapped over forward panels to reduce the likelihood of injury in the event of separation. The exposed edges of all interior panels shall be beaded, hemmed or flanged.

(2) Projections from the ceiling shall not be allowed in the entrance way or aisle. Except for the drivers' compartment, all speakers and accessory lighting devices shall be flush mounted or may extend up to one inch if edges are rounded or tapered. Accessory lighting shall be maintained in proper working condition.

(3) A convex mirror may be mounted on the inside rear of the school bus.

INSPECT/DEFECTS- INTERIOR — TRANS 300.52

1. **Check** for projections. (Flush mounting means 1 inch or less projection. No sharp edges.) *Exception: Refer to Trans 300.81(5) and (7).*

**** OOS if any projection likely to cause injury.**

LADDERS — TRANS 300.53

A school bus shall not have a ladder attached to the interior or exterior while it is in motion.

INSPECT/DEFECTS- LADDERS — TRANS 300.53

1. **Check** for ladder installation.

LIGHTS, LAMPS, AND REFLECTORS — TRANS 300.54

(1) The following lights, lamps, and reflectors are required on a school bus painted in accordance with s. 347.44(1), Stats. Each lamp shall be operational and meet the applicable SAE specifications as provided in this section.

(a) The bus shall be equipped with alternating red flashing lights.

1. The bus shall be equipped with 2 red warning lamps at the rear of the bus and 2 red warning lamps at the front of the bus, which shall be controlled by a manually actuated switch and shall flash alternately at rate of 60 to 120 cycles per minute. A brake or door operated switch shall not be permitted. The "on" period shall be long enough to permit bulb filament to come to full brightness.

a. An option is permitted whereby 2 additional alternating flashing red lights may be mounted on both the front and rear of the bus. The additional front facing lights shall be located between the bottom of the windshield and the top of the highest headlamp. They may be mounted on the fender or the cowl.

b. The additional rear facing lights may be separate lamps mounted within 12 inches above or below the directional turn signals or may be incorporated in an existing lamp. Any incorporation with an existing unit may not interfere with or override the existing unit's function. If the optional lighting system utilizes the rear directional signals, it shall be so designed that if both the directional signal lamp and the flashing red lights are activated during the same period of time, the flashing warning signals shall revert to only the 2 required warning signals until such time as the directional signal lamp is deactivated. The optional system may not be incorporated with the stop signal lamp.

c. The optional system shall have units with a red lens of at least the same diameter as the required alternating lights. The alternating "on," "off" positions shall be opposite from those of the required alternating lights. The effect will produce the required top mounted flashing light and an optional mid-height mounted light to flash on opposite sides simultaneously. The result can be described as a "wig-wag" or "cross-arm" effect.

2. The red warning lamps shall be of seal beam construction or other approved type such as strobe or light emitting diode, not less than 5 inches in diameter or with a surface area of at least 19 square inches if not round and visible from a distance of at least 500 feet along the axis of the vehicle in bright sunlight.

3. There shall be a visible or audible means of giving clear and unmistakable indication to driver when the signaling system is turned on.

4. Each red warning signal lamp shall be mounted with its axis substantially parallel to the longitudinal axis of the bus.

5. The front and rear red warning signal lamps shall be spaced as far apart laterally as practicable, and in no case shall the spacing between lamp centers be less than 3 feet.

6. The front red warning signal lamps shall be located so that they can be clearly distinguished when headlamps are lighted on lower beam.

7. The warning signal lamps shall be mounted at the front above the windshield and at the rear so that the lower edge of the lens is not lower than the top line of the side window openings.

8. The front and the rear signal lamps shall be unobstructed by any part of the bus from 5 degrees above to 10 degrees below horizontal and from 30 degrees to the right and 30 degrees to the left of the centerline of the bus.

9. The area around the lens of each alternately flashing red signal lamp and extending outward approximately 3 inches shall be painted black on all school buses. This subdivision shall not apply to vehicles not specifically manufactured as school buses and which have red warning signal lamps mounted above the roof top. Red warning signal lamps on such buses shall be equipped with black hoods at least 3 inches long.

10. Except as provided in sub. 9., red warning signal lamps may be equipped with hoods to shield from rays of sun for improved visibility.

11. Lamps shall meet the requirements of SAE J887.

12. Vehicles painted other than glossy yellow are prohibited from having the alternating red flashing lights mounted on the vehicle except as otherwise provided by statute.

(am) Each bus first registered on or after October 1, 1998, shall be equipped with a strobe light which shall conform with the following requirements:

(1) The strobe light shall be of solid-state construction. It shall emit a white light by flashing, not rotating, 360 degrees around the vertical axis.

(2) The strobe light shall be capable of operating continuously without any significant change in the flash rate under all operating conditions or weather extremes experienced in this state. The flash rate shall be no less than 60 nor more than 120 per minute. The double flash effect shall be counted as a single flash.

(3) The electronic power supply circuit shall provide a minimum of 10 joules to the strobe tube. The flash shall be so designed that there is a single or double flash or pulsing of the flash tube. A double flash unit may have different intensities with the first flash having the highest intensity.

LIGHTS, LAMPS, AND REFLECTORS — TRANS 300.54 (Continued)

(4) The strobe light shall be permanently mounted on the centerline of the bus roof not less than 3 feet from the front or rear of the bus. A strobe unit may not extend more than 8 inches above the roof.

(5) The unit may be wired with an independent switch with an indicator light in the driver's compartment showing when the light is in operation.

(6) The strobe light shall be actuated whenever the bus is in operation on a highway for purposes specified in s. 340.01(56)(a) and (am), Stats., and may be actuated when the bus is in operation on a highway and is transporting children for any other purpose. (rev. 03-19-99).

(b) Two backup lamps shall be provided which shall conform to SAE J593e.

(c) There shall be 2 red clearance lamps on the rear and 2 amber clearance lamps on the front, mounted as high and wide as practicable to indicate the vehicle's extreme width. Buses less than 80 inches wide are exempt from this paragraph.

(d) The bus shall be equipped with direction or turn signal lamps.

1. There shall be at or near the front, facing forward, one amber turn signal light on each side of the vertical centerline mounted at the same height, as wide as practicable. The bus may be equipped with signals mounted in the body or chassis. If not equipped with chassis or body mounted front turn signals, double- faced signals shall be installed either on the fender or hood and shall be as wide as practicable. Mounting of double faced signals may not be higher than the bottom of the windshield or lower than the headlamps.

2. There shall be on the rear, one red or amber signal on each side of the vertical centerline as wide as practicable mounted at the same height.

3. Rear turn signals shall be mounted no less than 15 inches nor more than 83 inches above the roadway.

4. Both the front and the rear signals shall comply with SAE J588f.

5. An auxiliary side mounted signal shall be installed on the sides of the body at approximately seat level, rub rail height, just to the rear of the service door on the right side and approximately opposite the driver's seat on the left side. These shall operate in conjunction with the turn signals. This subdivision applies to school buses of 30 feet or more in length. These lamps shall comply with SAE J914b.

(e) Each bus shall be equipped with a 4-way hazard warning operating unit which shall operate independently of the ignition or equivalent switch and when activated shall cause the turn signal lamps to flash simultaneously.

(f) The headlamps shall comply with SAE J579c.

(g) Each bus shall be equipped with a light designed to indicate when the high beam headlamps are lit and located to be visible to the driver.

(h) Each bus, 80 or more inches wide, shall be equipped with 3 amber identification lamps to the front and 3 red identification lamps to the rear with lamp centers no less than 6 inches nor more than 12 inches apart. No part of the front lamp or mountings shall be below the top of the bus windshield.

(i) Each bus, 30 feet or more in length, shall be equipped with intermediate side marker lamps meeting SAE J592f mounted no less than 15 inches above the road surface and at or near mid-point between the front and rear side marker lamps.

LIGHTS, LAMPS, AND REFLECTORS — TRANS 300.54 (Continued

(j) Each bus shall have a license plate lamp to illuminate the rear license plate. The lamp shall meet the standards of SAE J587.

(k) Each bus shall be equipped with side marker lights. One amber lamp shall be located on the side as far forward as possible and one red lamp shall be located as far rearward as practicable. The lamps shall conform to SAE J592.

(l) There shall be 2 red stop lamps meeting the requirements of SAE J586 mounted on the rear, one to each side of the vertical centerline at the same height and as far apart as practicable. Type A-I, B, C or D buses shall be equipped with lamps at least 7 inches in diameter or with at least 38 square inches of surface area if not round. The stop lamps shall activate upon application of the service brakes.

(m) There shall be 2 red tail lamps meeting the requirements of SAE J585e mounted on the rear, one on each side of the vertical centerline at the same height and as far apart as practicable. The tail lamps shall activate in conjunction with the headlamps. Two additional tail lamps may be utilized and incorporated in the stop lamp described in paragraph (L).

(n) There shall be reflex reflectors mounted on the bus located as follows:

1. On the rear, 2 red reflectors equally spaced as far apart from the center as practicable.

2. On the side, 2 reflectors; one amber at or near the front and one red at or near the rear (note: may be incorporated into front turn signal mounted on fender).

3. On the side of buses 30 feet or more in length, one amber reflector located at or near the center.

4. Each reflector shall be mounted no less than 15 inches nor more than 60 inches above the road surface.

5. Non-contrasting reflective tape or sheeting may be used on a school bus as an additional warning device.

6. Any lamp, light, or reflector shall be replaced only with a unit meeting the standards of this section.

7. School buses painted as provided in s. 347.44, Stats., and registered prior to October 1, 1998, may be equipped with a strobe light meeting the requirements of sub. (1)(am).

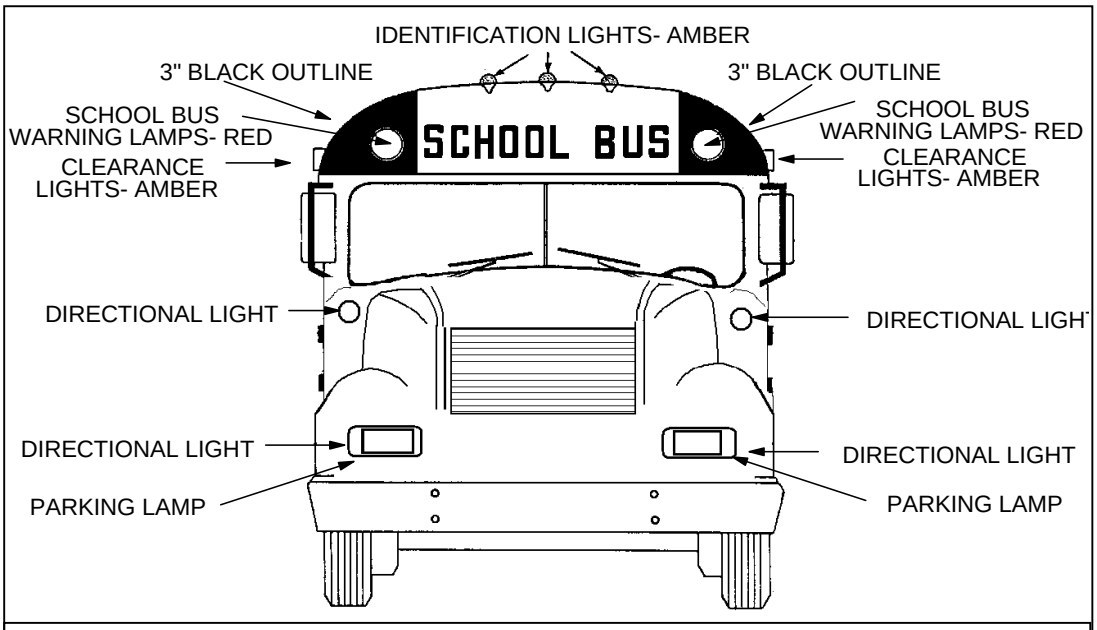
IDENTIFICATION LIGHTS- AMBER
3" BLACK OUTLINE
3" BLACK OUTLINE
SCHOOL BUS
WARNING LAMPS- RED
SCHOOL BUS
WARNING LAMPS- RED
CLEARANCE
LIGHTS- AMBER
CLEARANCE
LIGHTS- AMBER
SCHOOL BUS
DIRECTIONAL LIGHT
DIRECTIONAL LIGH
DIRECTIONAL LIGHT
DIRECTIONAL LIGHT
PARKING LAMP
PARKING LAMP

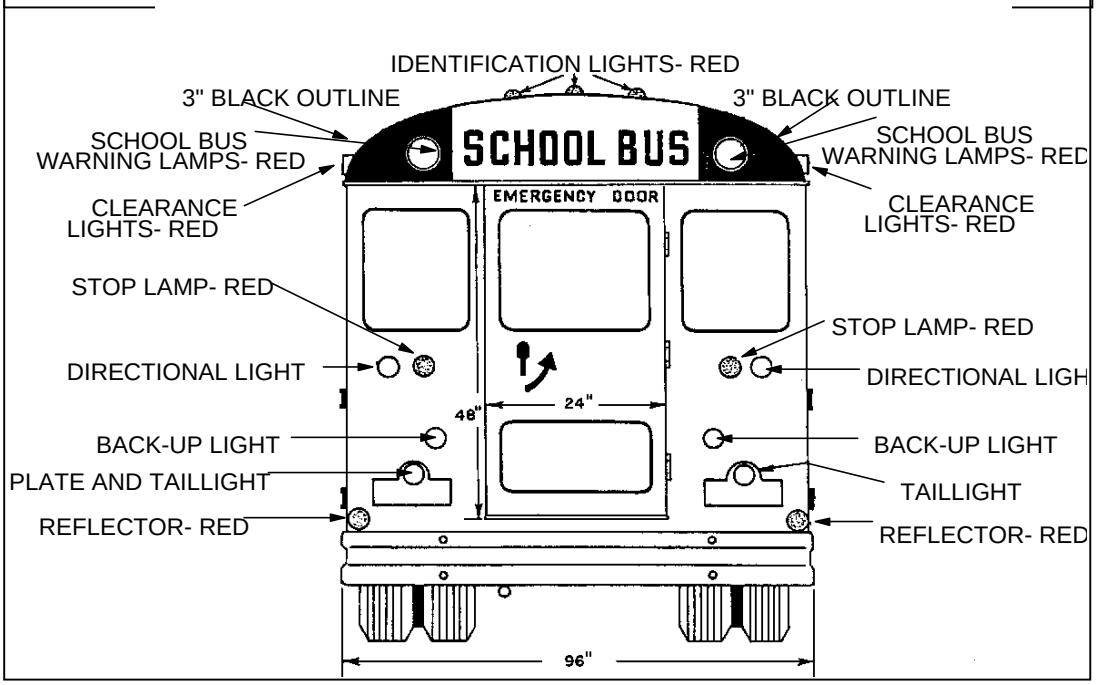
IDENTIFICATION LIGHTS- RED
3" BLACK OUTLINE
3" BLACK OUTLINE
SCHOOL BUS
WARNING LAMPS- RED
SCHOOL BUS
WARNING LAMPS- RED
SCHOOL BUS
EMERGENCY DOOR
CLEARANCE
LIGHTS- RED
CLEARANCE
LIGHTS- RED
STOP LAMP- RED
STOP LAMP- RED
DIRECTIONAL LIGHT
DIRECTIONAL LIGH
48"
24"
BACK-UP LIGHT
BACK-UP LIGHT
PLATE AND TAILLIGHT
TAILLIGHT
REFLECTOR- RED
REFLECTOR- RED
96"

INSPECT/DEFECTS- LIGHTS, LAMPS, AND REFLECTORS — TRANS 300.54

1. **Check** function and operation of the following: *Lights/reflectors should be checked for presence, operation, color, correct number, obstructions or devices restricting the amount of light, and condition of components such as lenses, mounting and wiring*

- **check** headlamps, high and low beams

**** OOS if during hours of darkness, both lamps inoperative.**

-**check** backup lamps.

-**check** red warning lamps

****OOS if any lamp is inoperative, defective or missing.**

-**check** tail lamps

**** OOS if during hours of darkness, both lamps inoperative/ missing**

-**check** stop lamps

**** OOS if both lamps are inoperative/missing.**

-**check** directional lamps

****OOS if school bus does not have at least one operative right and left directional lamp on the front and the rear.**

-**check**:

high beam indicator
indicator light for red flasher lamps
brake warning lamps (*see brake section*
parking lamps
side marker lamps
clearance lamps
fog lamps
identification lamps
license plate lamp
reflex reflectors
stepwell light
all interior lights
all others

2. Check strobe light for separate switch and pilot light operation -when applicable (note: Not required on buses with direct connection with ignition).

****OOS if inoperative and inclement weather conditions are present.**

3. **Check** that wigwag lights, if equipped, do not interfere with any other lights.

****OOS if wigwag interferes with directional or stop lamps.**

MIRRORS — TRANS 300.55

(1) School bus mirrors shall comply with the requirements in
49 CFR 571.111 and FMVSS 111. In addition, type A-I, B, C or D buses shall comply with the following:

(a) There shall be one interior rearview mirror of at least 6 by 30 inches. The mirror shall be so constructed that the corners are rounded and the edges are smooth or protected.

(b) An optional convex mirror may be mounted on the inside rear of the school bus.

(c) There shall be 2 outside rearview mirrors, one to the right and one to the left of the driver. Each mirror shall have not less than 50 square inches of unobstructed reflective surface and shall be firmly supported and adjustable to give the driver a clear view past both the right and left rear of the bus.

(d) There shall be an adjustable convex mirror or equivalent "banana type mirror" (FIGURES 1 & 2) mounted on the right side to provide an additional close-in field of vision from the front of the bus rearward. This mirror may be mounted on the bracket required for the cross view mirror. The mirror required in this paragraph shall be independently adjustable. It shall have at least a 7-inch diameter face.

(2) Type A-II buses shall have an interior and 2 exterior rearview mirrors, one on the right and one on the left side of the bus capable of reflecting a view past the rear of the bus. Mirrors shall not have sharp corners or edges.

(3) All buses after 3-1-95 shall be equipped with 2, 7-inch diameter convex mirrors or an equivalent "banana type mirror" which shall be mounted on the right and left sides in such a manner that the driver may observe a reflection of the road from beneath the front bumper forward to a point where direct observation is possible through each mirror. (FIGURE 3)

(4) Each mirror required in this section shall not be broken, cracked or discolored.

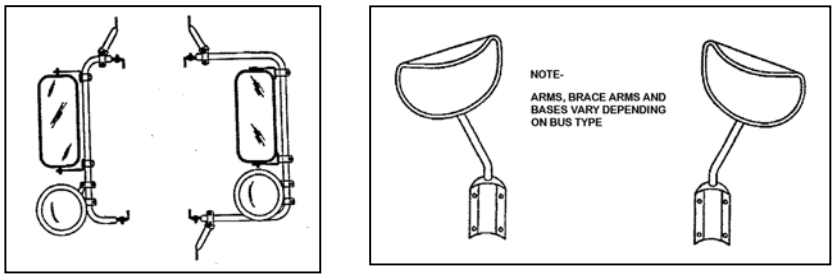

FIGURE 1

If banana style mirrors are used assure visibility requirements are met. Reference field of view test on page 44.

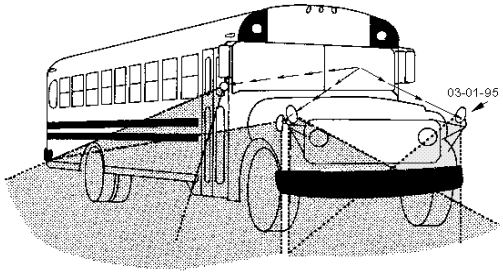

FIGURE 3

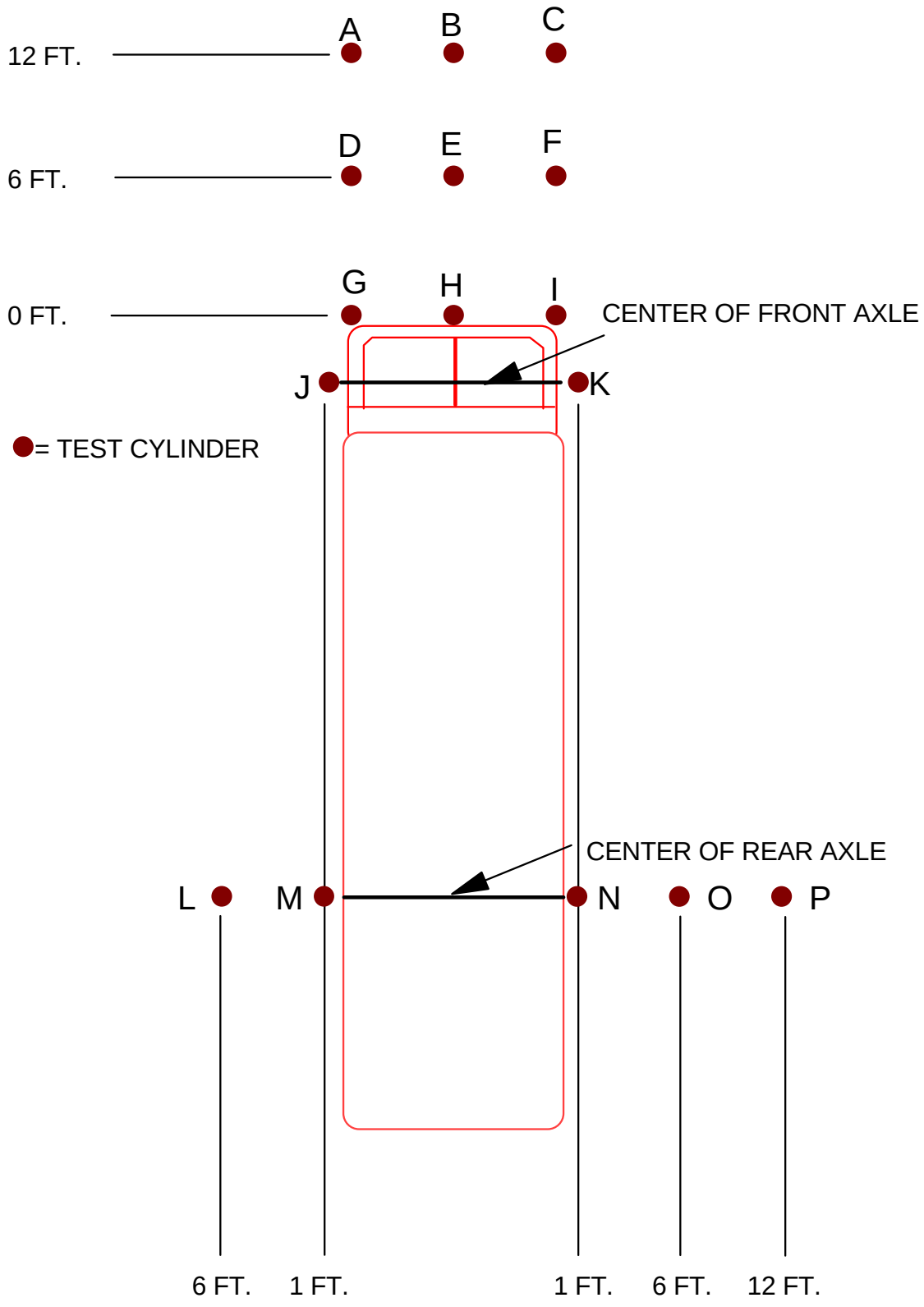

LOCATION OF TEST CYLINDERS FOR SCHOOL BUS FIELD-OF-VEIW TEST

INSPECT/DEFECTS- MIRRORS — TRANS 300.55

1. From the driver's position, **visually inspect interior mirror** for proper mounting, location cracks, sharp edges or ease of adjustment. **Visually inspect exterior mirrors** on both sides for clear and reasonably unobstructed views past right and left rear of the bus. Look for correct location, stable mounting, cracks, sharp edges, unnecessary protrusion and ease of adjustment.

****OOS if mirror is loosely mounted or does not provide a clear view to the rear.**

****OOS if mirror will not maintain a set adjustment.**

****OOS if mirror is not mounted on a stable support, not properly located or provides adequate view.**

****OOS if mirror is missing. (*For "cross-over" 300.55(3) 2 required 3-1-95 and later, 1 required prior to*)**
******For safety reasons two "cross-over" mirrors are suggested for all buses, if practical******

****OOS if view from mirror is obstructed.**

****OOS if mirror is cracked, broken, has sharp edges, is discolored, pitted, or clouded to the extent that vision is obscured.**

**** OOS if equipped optional convex interior mirror has exposed sharp edges.**

MOUNTING OF BODY - TRANS 300.56

(1) The chassis frame for body-on-chassis type buses shall extend to the rear edge of the rear body cross member. Insulating material used at body to frame contact points shall be so attached that it will remain in position under any anticipated maintenance or bus operating conditions.

(2) The body shall be securely fastened to the chassis frame. Every body attachment device shall be securely fastened and maintained with proper tension.

INSPECT/DEFECTS - MOUNTING OF BODY - TRANS 300.56

1. **Check** all body mounts.

**** OOS if 25% or more of body mounts defective, ineffective or missing.**

OPENINGS - TRANS 300.57

(1) All openings in the floorboard or firewall, between chassis and passenger compartment, such as for the gear shift lever and auxiliary brake lever, shall be sealed to prevent fumes or foreign material from entering the passenger compartment.
(2) Every school bus shall be free of rusted or deteriorated areas which could permit the entrance of foreign substance into the interior of the vehicle.

INSPECT/DEFECTS- OPENINGS - TRANS 300.57

1. **Check** for any openings in school bus body that would allow dust or exhaust fumes to enter the passenger compartment.

**** OOS if any openings allow exhaust in or not protected by conduits or grommets.**

2. Check for proper protection of hoses, tubing and wires that pass through floorboard of firewall.

RUB RAILS - TRANS 300.58

(1) Every bus shall contain a rub rail located at seat cushion level. Except at the emergency door, rear compartment or special service door, the seat cushion level rub rail shall extend from the rear side of the service door completely around the bus body, to a point of curvature near the front of the body on the left side. On a type A-II bus, the seat cushion level rub rail is not required to extend around the rear corners of the bus and may terminate at the radii of the right and left rear corners.

(2) There shall be one floor line rub rail. This rub rail shall be located in an area so that the center of the rub rail is located at or between the following points:

(a) No more than 7 inches above the top of the steel floor, or

(b) No more than 5 inches below the top of the steel floor. The floor line rub rail shall extend over the same longitudinal distance as the seat level rub rail, except where it meets the wheel housing, fuel filler caps, fuel fill doors, side marker lights and may terminate at the radii of the right and left rear corners.

(3) Rub rails shall be constructed of 16 gauge longitudinally corrugated or ribbed steel of 4-inch maximum width, flange to flange. Each rub rail flange shall be attached at each body post and all other upright structural members.

(4) Rub rails that are pressed in or snapped on do not meet the requirements of this section and are not permitted.

(5) Rub rails applied to transit type buses with the engine in the rear may terminate at the forward edge of the engine compartment.

INSPECT/DEFECTS-	RUB RAILS - TRANS 300.58
1.	**Check** for location and attachments.
	**** OOS if not properly located or attached.**
	**** OOS if missing or not proper size.**
2.	**Check** for damage/ deterioration.
3.	If type A-II bus, **check** that rub rails go to rear corners.
	**** OOS if not properly located or attached.**
	**** OOS if missing or not proper size.**

SEATING - TRANS 300.59

(1) All seats shall be forward facing and securely fastened to that part or parts of the body which support them. Passenger seat cushions shall be fastened to prevent the cushions from disengaging from the seat frames in event of an accident. There shall be a minimum space of 24 inches between the forward surface of a seat back and the rear surface of the seat or barrier ahead measured across the seat cushion without depressing any surface. The forward surface of seat backs may have side bolsters that briefly reduce the width to less than 24 inches provided the remainder of the seat measures at least 24 inches.

(2) The forward most seat on the right side of the bus shall be located so as not to interfere with the driver's vision.

(3) A minimum of 36 inches of headroom for the sitting position above the top of the non-depressed cushion line of all seats shall be provided. The measurement shall be made vertically not more than 11 inches from the side wall at cushion height and at the fore and aft center of the cushion.

SEATING - TRANS 300.59(Continued)

(4) (a) The backs of the seats of similar size shall be of the same width at the top and of the same height from the floor and shall slant at the same angle with the floor. The top corners, and at least 10 inches of the top of the back surface of the seat backs shall be padded sufficiently to reduce the likelihood of injury upon impact. Seat cushions and seat backs shall not have any torn or worn-through covering material.

(b) The seat back of the rearmost seat shall be of the same dimension as the seat immediately forward. Failure to comply with this standard will result in the loss of one seating position, or 2 seating positions if this situation occurs in both rows, when determining the capacity of the bus. This requirement shall apply only to type A-II, B, C, or D school buses, manufactured after January 1, 1984.

(5) Fold down, fold up or reclining seats or seat backs are not permitted in a school bus except as allowed in s. Trans 300.33(3).

(6) A child restraint seat may be installed in place of a standard seat. The replacement seat shall meet all of the requirements in this section, except that the seat back may exceed the seat height of the remaining bus seats by not more than 4 inches.

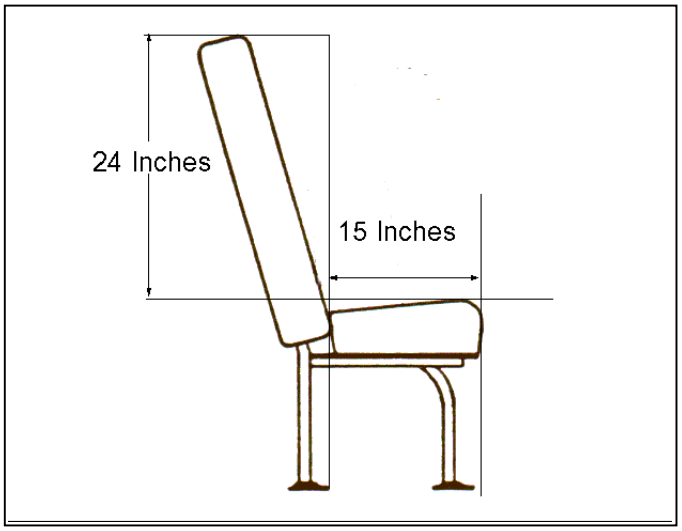

INSPECT/DEFECTS- SEATING - TRANS 300.59

1. Inspect seats to see that they are securely anchored to floor pan.

**** OOS if seat anchor bolts are not securely fastened to floor or are missing.**

2. **Inspect** seats for condition of frames, springs, and cover.

****OOS if seat cushions are loose-** ***only in the case where the cushion can be completely removed from the framing without the use of tools.***

3. Inspect seat belts for frayed, split or torn webbing, malfunctioning buckles, and loose or damaged anchors.

4. **Check** knee spacing.

5. **Check** for fold down or reclining seats.

**** OOS if fold down or reclining seats except as specified at emergency exits.** ***Reference 300.39.***

SERVICE DOOR - TRANS 300.60

(1) The service door shall be under control of the driver and so designed as to prevent accidental opening. When a hand lever is used, no parts shall come together so as to shear or crush any fingers.

(2) The service door shall be located on the right side of the bus and within the view of the driver.

(3) The service door shall have a minimum horizontal opening of 24 inches and a minimum vertical opening of 68 inches.

(4) The upper and lower glass panels of the service door shall be of safety glass. The bottom of the lower glass panels shall not be more than 35 inches from the ground when the bus is unloaded. The top of the upper glass panel shall not be more than 6 inches from the top of the door. The upper glass panel must be of insulated glass or of a thermo electric design that performs at least as well as insulated glass.

(5) Any lock used in conjunction with the service door must be constructed to insure that the door is not in the locked position while transporting passengers.

(6) The service door shall be equipped with a seal to prevent dust and cold air from entering the vehicle.

(7) Type A-II buses need not comply with subs. (3) and (4).

INSPECT/DEFECTS- SERVICE DOOR - TRANS 300.60

1. From the driver's position, **inspect** size and function of opening and closing operation.

2. Inspect condition of flexible material on vertical closing edges.

3. Check for proper glazing.

**** OOS if clouded or non-transparent and severely limits driver's view.**

4. Check to ensure that service door cannot be locked externally while transporting passengers.

****OOS service door can be locked externally while transporting passengers.**

5. Check to ensure that horizontal opening at service door is 24".

6. Check that seals around service door do not allow fumes, dust and cold air from entering the bus.

SIGNS AND LETTERING — TRANS 300.61

(1) Only signs and lettering approved by state law or rule shall appear on or in the bus.

(2) The body shall bear words "School Bus" in black letters at least 8 inches high and one-inch stroke on both front and rear or on yellow signs attached thereto. The lettering shall be placed above the rear window and the front windshield. This lettering shall only appear on buses painted the yellow and black school bus colors and meeting all the requirements of Trans 300. (See FIGURE 1 – Page 52.)

(3) Each school bus painted the yellow and black color scheme shall have a fleet number consisting of no more than 4 digits. The fleet number shall appear on the front and the rear of the bus. Additional fleet number locations may be utilized at the owner's option.

(4) Fleet numbers shall be no less than 3 inches nor more than 6 inches high with a ½ inch brush stroke.

(5) Fleet numbers are prohibited in the black area around the alternately flashing red lights.

SIGNS AND LETTERING — TRANS 300.61(Continued)

(6) The name and address (and telephone number, if desired) of the owner or operator shall be displayed below the window line in the panel to the rear of, and as close as possible to, the service door in letters not less than 2 inches high nor more than 3 inches high by ¼ inch stroke. If desired, this marking may also be painted on the left side of the bus below the driver's window. Owner's decals may be used to comply with this subsection if the decals do not violate other provisions of this section.

(7) The name of the school bus firm may appear on the sides of the bus between the seat line rub rail and the bottom window line in contrasting yellow or black letters not more than 10 inches high. The owner's name may also appear on the rear bumper in school bus yellow. The lettering shall not exceed 6 inches in height with a ½ inch brush stroke. These options shall not relieve the owner or operator from the requirements of sub. (6).

(8) The vehicle's registration card or a photocopy of the card shall be displayed in the driver's compartment and shall be mounted in a holder so the card can be read without removal. The passenger capacity shall appear on the inside of the bus above the front windshield so it can be easily read. It shall indicate the number of seated passengers that may legally be transported. Each wheelchair position shall be counted as a seated passenger.

(9) Each school bus with an emergency exit shall have the exit identified as required in S. Trans 300.39.

(10) The following signs are the only other decals, stickers, or lettering that may appear on the bus:

(a) No smoking, eating or drinking, (maximum 2-inch high letters).

(b) Any signs required by the federal bureau of motor carrier safety or national highway traffic safety administration.

(c) Identification as to location of emergency equipment.

(d) Seat belt use required in this vehicle.

(e) Seating chart, (maximum size 8½ x 11 inches).

(f) Rules pertaining to passenger conduct, (maximum 8½ x 11 inches).

(g) Any decal denoting membership in an association dealing with school transportation. The decal shall be placed within 12 inches to the rear of the service door and below window line. It may not exceed 36 square inches.

(gm) For vehicles powered by liquefied petroleum gas, a silver or white diamond-shaped decal on a black background, 4 3/4 inches long by 3 ¼ inches high and displaying the work "PROPANE" in one-inch letters displayed on the right rear corner of the bus.

(h) A sign indicating type of fuel used.

(i) A placard, decal or other device, not to exceed 90 square inches in size, to identify the bus to the children. **Note: This device shall not be placed in any thermo pane required by this rule. A magnetic yellow with black identifier, placed behind the service door, is suggested but not required.**

(j) Emergency telephone number may be placed in the driver's compartment in accordance with the following criteria:
1. The device the numbers are displayed on shall not exceed 5 inches by 7 inches and may include a current calendar.
2. Acceptable emergency telephone numbers: police, fire, rescue squad, school bus contractor, and school transportation director or administrator.

INSPECT/DEFECTS- SIGNS AND LETTERING — TRANS 300.61

1. Check all required signs for proper size, color, and location including:

SCHOOL BUS
Fleet Numbers
Name and Address
Passenger Capacity
Emergency Exit Lettering

**** OOS if "SCHOOL BUS" lettering is missing.**

(*Note: 1/4" tolerance on 8" x 1" lettering on vehicles placed in service prior to 8-1-98. Zero tolerance for pre-sales (pre-sales only) conducted on or after 8-1-98.)

FIGURE 1

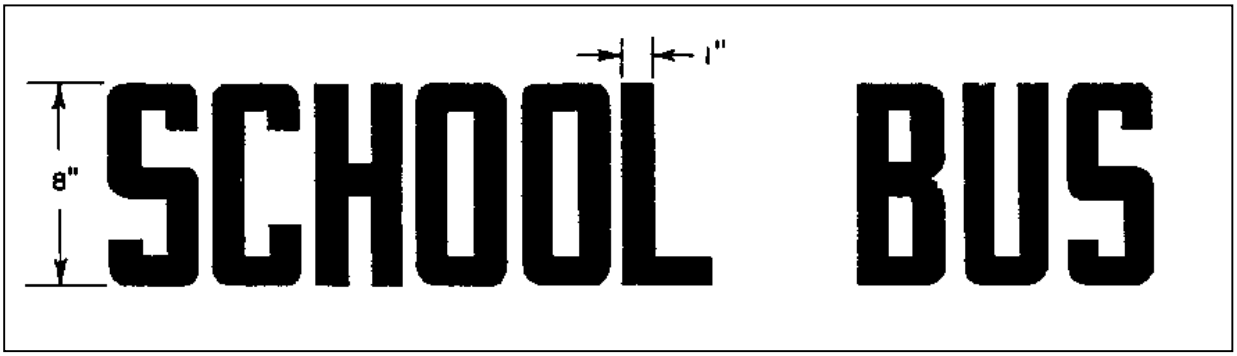

2. Check registration card.

STEERING — TRANS 300.62

(1) Steering systems shall comply with 49 CFR 393.209. No changes may be made in the steering apparatus without the approval of the chassis manufacturer.

(2) There shall be a clearance of at least 2 inches between the steering wheel and the cowl, instrument panel, windshield, or any other surface.

(3) The steering components may not be loose, worn, or binding and steering stops shall be adjusted so the tire does not rub at any point. The steering wheel lash may not exceed that found in 49 CFR 393.209(b).

(4) The power steering system shall not leak nor shall the drive belt be cracked, frayed or worn.

INSPECT/DEFECTS- STEERING — TRANS 300.62

1. **Check** for secure steering wheel attachment.

**** OOS if steering wheel is non properly secured.**

2. **Check** steering wheel clearance from wheel to cowl.

**** OOS if steering wheel to cowl clearance is less than 1 ¾ inches.**

2. **Check** steering wheel lash. With road wheels in straight ahead position, turn steering wheel in one direction just until the steering motion can be observed at the road wheels. Mark steering wheel position. Now turn steering wheel in opposite direction just until steering motion can again be detected at the road wheels. Mark second position. Compare measurements to those listed in defective chart. With power steering systems the engine must be running to perform this test.

Steering Wheel lash:

Wheel Size	**Manual**		**Power**	
	Defect	***OOS***	*Defect*	***OOS***
16" or less	2" +	**4 ½"**	4 ½"	**6 3/4"**
18"	2 ¼"	**4 3/4"**	4 3/4"	**7 1/8"**
19"	2 3/8"	**5"**	5"	**7 ½"**
20"	2 ½"	**5 ¼"**	5 ¼"	**7 7/8"**
21"	2 5/8"	**5 ½"**	5 5/8"	**8 ¼"**
22"	2 3/4"	**5 3/4"**	5 3/4"	**8 5/8"**

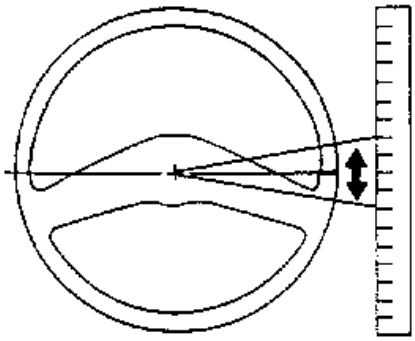

STEERING LASH

4. Check steering stops by moving the steering wheel from right to left through the full range of steering movement.

**** OOS if any modification or other condition that interferes with the free movement of any steering component.**

5. Inspect steering column for any looseness in bolts, clamps, positioning parts or universal joints. Check general condition.

****OOS if any absence or looseness of U-bolts or other positioning parts.**
****OOS if any worn, faulty, or obviously repair-welded universal joints.**

6. **Inspect** steering gear box, pitman arm, connecting rod, ball and socket joints, tie rod, drag links, front axle beam and all steering components.

Front Axle Beam and Other Steering Components

****OOS if any cracks.**

****OOS if any obvious welded repairs.**

****OOS if steering stop is broken or missing permitting tire to rub on frame or other component.**

Steering Gear Box

**** OOS if any mounting bolts are loose or missing.**

**** OOS if any cracks in gearbox or mounting brackets.**

Pitman Arm

****OOS if any looseness of the pitman arm to steering gear output shaft.**

****OOS if any obvious welded repair.**

INSPECT/DEFECTS- STEERING — TRANS 300.62(Continued)

Ball and Socket Joints

****OOS if any movement under steering loads of a stud nut.**

****OOS if any motion, other than rotational, between any linkage member and its attachment point of more than 1/8 inch when measured with hand pressure only (Also observe movement while steering is be rocked if practical)(*rev.11-25-98*)**

****OOS if any obvious welded repair.**

Tie Rods, Connecting Rods, and Drag Links

****OOS if any loose clamps or clamp bolts or any looseness in any threaded joint.**

7. **Inspect** power steering belts for proper tension and condition.

8. Inspect power steering system including hoses, hose connections, cylinders, valves, pump and pump mounting for condition, rubbing and leaks.

****OOS if cylinders, valves or pump show evidence of leakage (i.e. dripping or obvious fluid loss).**

****OOS if pump mounting parts are broken or loose.**

**** OOS if any auxiliary power assist cylinder is loose.**

**** OOS if hose, hose connection, or seals are leaking.**

9. Inspect power steering reservoir for fluid level at operating temperature.

****OOS if reservoir is empty.**

STEPS — TRANS 300.63

(1) The first step at the service door shall not be more than 16 inches from the ground.

(2) The riser of any step shall not be more than 15 inches. If there are 2 or more risers, they shall be approximately equal in height.

(3) The step may not protrude beyond the widest part of the body.

(4) Each step shall be covered with or constructed of nonskid material.

(5) All steps shall be enclosed to prevent the accumulation of ice or snow except the first step of a type A-II bus that may have an exposed step with a slip resistant surface.

(6) Each bus shall be equipped with a step-well light that activates automatically upon opening of the service door to illuminate the steps. This light is not required to be operational during daylight hours. However, it must be in a working condition at all times.

(7) Each school bus shall be equipped with a grab handle at least 10 inches in length, located inside the service door entrance for providing assistance to enter or leave the bus.

INSPECT/DEFECTS- STEPS — TRANS 300.63

1. Check service door steps/risers for proper height.

2. Check that steps do not protrude beyond the widest part of the bus.

3. Check that each step is covered with or constructed of a nonskid material.

****OOS if step is not covered with or constructed of slip resistant material.**

4. Check that steps are enclosed (see exception in Trans 300.63(5) for <10,000 pounds).

5. **Check** for presence and operation of step-well light.

6. **Check** for grab handle presence, length and appropriate spacer to eliminate the snagging of articles (clothing, book bags, etc.) that could be carried on or off the bus.

****OOS if grab handle allows for the potential of snagging articles that could be carried on or off the bus.**

STOP SIGNAL ARM — TRANS 300.64

(1) A stop signal arm that meets FMVSS 131 and SAE J1133 is required on every school bus painted with the yellow and black color scheme. The stop signal arm shall not be extended until the bus is completely stopped.

(2 The stop signal arm shall be installed in such a manner that it cannot be activated unless the alternately flashing red lamps are in operation.

(3) The following specifications shall govern installation of the stop signal arm:

(a) It shall be a metal, or material with strength at least equivalent to all-steel, as certified by the manufacturer, octagon-shaped sign at least 18 inches wide and 18 inches long exclusive of the mounting bracket. All sheet metal parts shall be 16 gauge or heavier.

(b) It shall have the word "STOP" on both sides in white letters at least 6 inches high and 7/8 inch wide on a bright red background. The outer edge shall have a white border at least 6 inches high and 7/8 inch wide on a bright red background. The outer edge shall have a white border at least ½ inch wide. All other parts of the assembly shall be painted black.

(c) It shall be equipped with 2, 4-inch or larger, double faced alternating flashing red lamps to be mounted near the perimeter of the sign with a minimum of 12 inches spacing between the lamp centers. These lamps shall be wired to the circuit of the flashing red warning lamps mounted on the front and rear of the bus. These lamps may be strobe lamps or light emitting diodes. In lieu of the 2 double faced alternating flashing red lamps, the stop signal arm may be equipped with red flashing, high visibility light-emitting diodes incorporated into the word “STOP,” in accordance with the requirements of sub. (3)(b).

(4) Reflectorizing of the sign shall be optional.

(5) The stop signal arm shall be mounted on the left side of bus as close to the driver's window as practicable.

(6) The requirements of this section for the operation of the stop signal arm shall not apply to school buses which are operated only in areas where use of the flashing red warning lights is not permitted.

INSPECT/DEFECTS- STOP SIGNAL ARM — TRANS 300.64

1. **Check** that stop signal arm is present and operational.
   (a) Arm extends to approximately a 90-degree angle.
   (b) Operates with opening of service door only.
   (c) Operates with alternately flashing warning lights only.

****OOS if bus is not equipped with a stop signal arm or it does not function.**

****OOS if stop arm does not fully extend to approximately 90 degrees.**

****OOS if stop signal arm does not operate in conjunction with the red warning lights.**

****OOS if stop signal arm does not retract.**

****OOS if stop signal equipped with high-visibility / high intensity diodes do not flash or function properly.**

2. Check that stop arm meets specifications outlined in Trans 300.64(3)(a)-(c).

****OOS if stop signal arm does not meet requirements of specifications of Trans 300.64(3)(c).**

****OOS if the word "STOP" is rusted, pitted, deteriorated, or damaged in any way that may reduce the effectiveness of the sign.**

3. Check that stop signal arm is properly mounted.

****OOS if stop arm is loose or not properly attached.**

4. On vacuum activated stop arms, **check** operation with engine turned "off" and key in the "on" position. Activate red warning lights with the service door open. Stop arm should extend and stay extended. If it does not extend, build vacuum by placing vehicle in either "park" or "neutral" and start bus. At this time, the red warning lights would be activated and the service door is open. Stop arm should be extended at this time. Turn vehicle "off" until the engine is stopped and then turn the key back in the "on" position. Stop arm should stay extended. If it does not stay extended, check to see if the check valve is functioning in the vacuum line and that the vacuum reservoir for the stop arm is not leaking or missing.

**** OOS if stop signal arm does not remain extended when engine is turned off with the key in the on position (*if vacuum activated*) (*rev. 11-25-98*).**

**** OOS if vacuum is not protected or leaks (non-protected includes absence of vacuum reservoir).**

SUNSHIELD — TRANS 300.65

Each school bus shall have an interior sunshield installed above the windshield. Each bus of more than 10,000 pounds GVWR shall have one of a size not less than 6 by 16 inches.

INSPECT/DEFECTS- SUNSHIELD — TRANS 300.65

1. Check broken, bent or loose parts that prevent the sunshield from being positioned.

2. **Check** that sunshield stays in position.

3. **Check** for proper size.

SUSPENSION SYSTEM — TRANS 300.66

(1) (a) The suspension system shall comply with the requirements in 49 CFR 393.207. The bus shall be equipped with front and rear shock absorbers.

(b) The shock absorbers shall be maintained free of leaks and all mountings shall be in good working order.

(2) A school bus shall not be operated with any broken spring leaf or worn, loose, dislocated shackles or "U" bolts.

INSPECT/DEFECTS- SUSPENSION SYSTEM — TRANS 300.66

1. If air suspension present, **check** all components of air ride suspension.

**** OOS if deflated air suspension.**

2. Inspect for broken or sagging springs.

**** OOS if any spring leaves in a leaf spring assembly are broken, or any center bolt is broken, loose or missing.**

**** OOS if one or more leaves are displaced in such a manner that it could result in contact with a tire, rim, and brake drum, or frame.**

**** OOS if any coil spring is broken.**

**** OOS if any rubber spring is missing.**

3. Inspect spring hanger brackets and shackles, spring assembly center bolts, "U" bolts, clips, and other attaching parts.

**** OOS if any U-bolt or other spring to axle clamp bolt is cracked, broken, loose, or missing.**

**** OOS if a broken torsion bar in torsion bar suspension.**

**** OOS if any spring hanger, other axle positioning part or spring attaching part is cracked, broken, loose or missing resulting in shifting of an axle from its normal position.**

4. Inspect shock absorbers and mountings for oil leakage, condition of bushings and attachments.

****OOS if the shock absorbers are loose, broken, or missing.**

TIRES — TRANS 300.67

(1) The front tires shall have tread depth of at least 4/32-inch and rear tires shall have tread depth of at least 2/32-inch around the entire periphery measured at 2 points no less than 15 inches apart in any major tread groove.

(2) A school bus may not be operated with re-grooved, recapped, or re-treaded tires on the front wheels.

(3) A school bus may not be operated with cuts or chunks missing exposing the cord, recaps peeled loose or off, or showing an indication of ply separation.

(4) Tires of different size or ply rating may be used except that all tires on an axle must be the same size and type. Bias and radial tires may not be mixed.

(5) All tires shall be maintained to meet the manufacturer's GAWR and GVWR.

TIRES — TRANS 300.67(Continued)

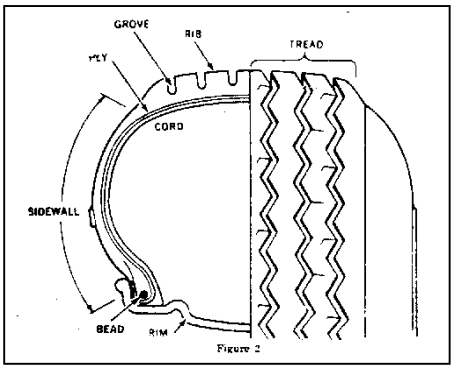

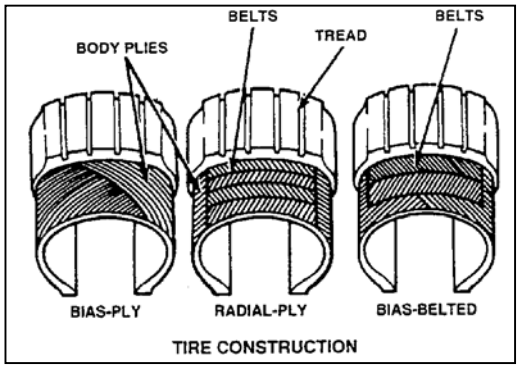

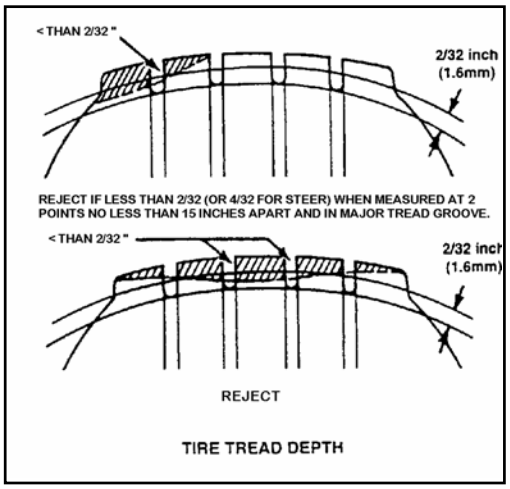

INSPECT/DEFECTS- TIRES — TRANS 300.67

1. Visually inspect all tires for condition and wear. Check tire tread depth with tread depth gauge to ensure tire tread is not below required tread depth standards.

****OOS if less than 4/32 inch tread when measured no less than 15 inches apart in any two adjacent major tread grooves at any location on a steering axle tire.**

****OOS if so worn that less than 2/32 inch tread remains when measured no less than 15 inches apart in any two adjacent major tread grooves at any location on tires other than the steering axle tires.**

****OOS if seventy-five percent or more of the tread width loose or missing in excess of 12 inches in circumference.**

****OOS if any part of the breaker strip or casing ply is showing in the tread.**

****OOS if tire is cut, worn or damaged to the extent the ply cord is exposed.**

****OOS if observable bump, bulge, or knot apparently related to tread or sidewall separation.**

Exception: A bulge due to a section repair is allowed, not to exceed 3/8" in height. A blue triangular label in the immediate vicinity may sometimes identify this bulge.

INSPECT/DEFECTS- TIRES — TRANS 300.67(Continued)

****OOS if tire is flat or has noticeable (e.g., can be heard or felt) leak.**

****OOS — Bias Ply Tire: When more than one ply is exposed in the tread area or sidewall or when the exposed area of the top ply exceeds 2 square inches.**

****OOS — Radial Ply Tire: When two or more plies are exposed in the tread area or damaged cords are evident in the sidewall or when the exposed area exceeds 2 square inches in the sidewall.**

****OOS if so mounted or inflated that it comes in contact with any part of the vehicle. (This includes any tire contacting its mate in a dual set.)**

****OOS if weight carried exceeds tire load limit. This includes overloaded tires resulting from low air pressure.**

2. **Visually check** tires to ensure that each axle has the same size and type of tire, does not have a mixture of bias and radial tires and that the steer axle tires have not been recapped, re-grooved or re-treaded.

****OOS if recapped, re-grooved, or re-treaded tires on steering axle.**

****OOS if different size and type of tires on an axle.**

****OOS if a mixture of bias and radial tires on an axle.**

****OOS if labeled "not for highway use" or carrying other markings that would exclude use.**

WHEELS — TRANS 300.68

(1) A bus may not be operated with any cracked rims, loose lug bolts or nuts or elongated stud holes.

(2) The wheel bearings shall not have more than ¼ inch free play when measured at the tire level.

(3) The following measurements are the maximum amount of play permitted in the king pins or ball joints when measured at the outside of the tire:

(a) When the wheel diameter is 16 inches or less, not more than ¼ inch play is permitted.

(b) When the wheel diameter is greater than 16 inches the play permitted is 3/8 inch.

INSPECT/DEFECTS- WHEELS — TRANS 300.68

1. **Visually inspect** wheels for cracks, loose or missing lug nuts and bolts, elongated stud holes and improperly seated, sprung, or broken side rings.

****OOS if lock or side ring is bent, broken, cracked, improperly seated, sprung, or mismatched ring(s).**

****OOS if there any cracks in the rim except an intentional manufactured crack at a valve stem hole.**

****OOS if there are 50% or more elongated stud holes (fasteners tight).**

****OOS if loose, missing, broken, cracked, or stripped lug nuts or bolts (both spoke and disc wheels) as follows: for 10 fastener position — 3 anywhere or 2 adjacent; for 8 fastener positions or less (including spoke wheels and hub bolts) — 2 anywhere.**

****OOS if any cracks in the welds attaching disc wheel disc to rim.**

****OOS if any cracks in welds attaching tubeless demountable rim to adapter.**

****OOS if there is any welded repair on aluminum wheel(s) on a steering axle.**

****OOS if there is any welded repair other than disc to rim attachment on steel disc wheel(s) mounted on the steering axle.**

3. Check front wheel bearings and king pins by raising front end of vehicle off the ground. Attempt to move wheel relative to the spindle either by grasping front tire top and bottom or by using a bar for leverage. Bearing maladjustment or wear is determined by the relative movement between the brake drum (or disc) and the backing plate (or splash shield).

****OOS if there is more than ¼" play in wheel bearings when measured at the tire level.**

****OOS if there is more than ¼" play in king pin or ball joints with a wheel diameter of 16" or less.**

****OOS if there is more than 3/8" or more play in king pin or ball joints with wheel diameter of 17" -18".**

****OOS if there is more than 1/2" or more play in king pin or ball joints with wheel diameter over18".**

Note: In order to determine if play is due to kingpin or wheel bearing apply brakes. If play is still evident with brake applied movement is due to a defective kingpin. 2/3/99

Jack position for kingpin inspection.

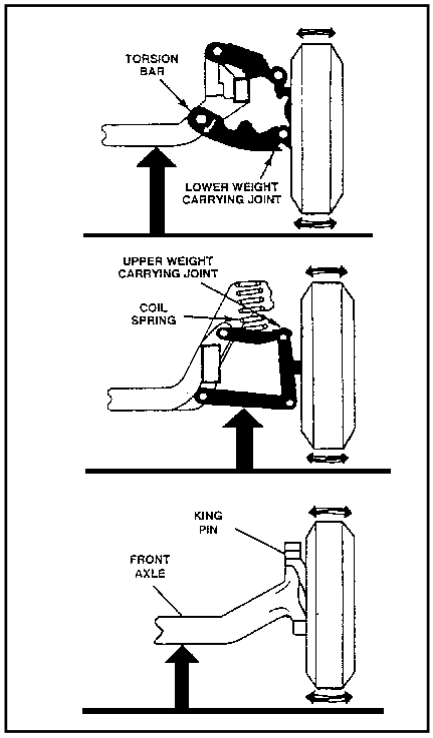

WINDOWS — TRANS 300.69

(1) In this section:

(a) "ANS Z26.1" means the standards for glazing in land vehicles adopted by reference in s. Trans 300.20 (1)(k), under 49 CFR part 571, motor vehicle safety standard 205, glazing materials.

(b) "AS 1" to "AS 11" have the same meaning as in section 6 of ANS Z26.1.

(c) "AS 12" means a safety plastic material that includes all of the following:

1. Complies with tests 10, 13, 16, 17, 21, and 24 of ANS Z26.1.

2. Complies with tests 19 and 20 of ANS Z26.1 with the exception of the test for resistance to undiluted denatured alcohol; and

3. In new buses or in replacement glazing has affixed a manufacturer's label specifying instructions and agents for cleaning the glazing that will minimize the loss of transparency.

(d) "AS 13" means a safety plastic material that:

1. Complies with tests 16, 22, and either 23 or 24 of ANS Z26.1;

2. Complies with tests 19 and 20 of ANS Z26.1 with the exception of the test for resistance to undiluted denatured alcohol; and

3. In new buses or in replacement glazing has affixed a manufacturer's label specifying instructions and agents for cleaning the glazing that will minimize the loss of transparency.

(2) The glazing in windows to the right and left of the driver shall be identified by the designation AS 1 or AS 2. The rearmost windows shall be designated AS 1, AS 2, AS 4, or AS 5, except that the lower glazed portion of the emergency door may be designated AS 8. Any other side push-out or kick-out windows may be identified with glazing designated as AS 1, AS 2, AS 3, AS 4, AS 5, AS 12, or AS 13. See Informational Memorandum 6-99-2.

(3) On type A-I, B, C or D buses, the window to the driver's immediate left and the window immediately to the rear of the service door shall be hermetically sealed glass with an insulating air space or equipped with thermo electric glass that performs at least equally well. Exceptions are cutaway van based vehicles manufactured in 2 stages equipped with a driver's door and a roll-up window. If a lift and lift door are located immediately to the rear of the service door, the window in the lift door is not required to meet this requirement. The window to the rear of the lift door may be glazing applicable to other windows.

(4) Each full side window shall provide a vertical opening of at least 9 inches, obtained by lowering the top portion of the window. The driver's window may be of a sliding forward and rearward construction. A type A—II bus, having windows, which do not open from the top, shall have no more than a 5-inch wide opening.

(5) All windows shall operate freely. The side window latches shall be capable of holding the window securely in place in all positions.

(6) All exposed edges shall be banded or ground.

(7) A distinctive audible signal automatically operated shall clearly indicate to the driver the unlatching of an emergency window when the ignition is in the "on" position. A cut-off shall not be installed in the circuit.

INSPECT/DEFECTS- WINDOWS — TRANS 300.69

1. **Visually and manually inspect** the following:

a. Drivers window.
Check that it is hermetically sealed with an air space (if over 10,000 GVWR), is not discolored, fogged, tinted, obscured, opens and closes easily, has at least a 9 inch opening.

b. Emergency window.
Check that there is an audible signal when opened, opens easily, has proper identification decal, and has directions to open within 6" of release mechanism. ***NOTE: See Exception in Rule for roll-down windows.***

c. Side passenger window.
Check that there is a minimum of a 9" opening; if 10,000 or less GVWR, and if windows do not operate from the top, there is no more than a 5" wide opening; opens and closes properly.

d. Side passenger windows immediately behind service door.
Check that they are hermetically sealed with an air space (if over 10,000 GVWR); are not discolored, fogged, tinted, or obscured; open and close easily; has at least a 9" opening.

**** OOS if hermetically sealed windows are fogged, cracked, or discolored to severely limit visibility.**

**** OOS if an audible signal is not heard when the emergency window is unlatched.**

**** OOS if a window has a crack which distorts driver's vision or could cause injury due to a sharp exposed edge.**

WINDSHIELD — TRANS 300.70

(1) The glass in the windshield shall be laminated safety glass identified by the designation AS 1. The mark shall be visible and legible. The glass shall be of such quality as to prevent distortion of view in any direction.

(2) The windshield may not be obstructed.

INSPECT/DEFECTS- WINDSHIELD — TRANS 300.70

1. Visually **inspect** windshield for proper "AS 1" safety class designation, cracks, chips, discoloration, and vision obstruction.

**** OOS if the windshield has damage or discoloration severe enough to distort the driver's vision.**

WINDSHIELD WASHER — TRANS 300.71

(1) Each school bus shall be equipped with an operational windshield washer system that provides fluid for the windshield wipers to effectively clean the windshield.

(2) The washer shall be maintained and operational.

INSPECT/DEFECTS- WINDSHIELD WASHER— TRANS 300.71

1. Manually **activate** windshield washer to determine if fluid is being provided to windshield wipers.

WINDSHIELD WIPERS — TRANS 300.72

Every school bus shall be equipped with 2 complete and operational windshield wipers. The system shall have at least 2 speeds.

INSPECT/DEFECTS- WINDSHIELD WIPERS— TRANS 300.72

1. Manually **activate** the windshield wipers to determine if both wipers operate on high and low speeds. Wiper blades should contact the windshield firmly and not be torn or damaged. When activated, the wiper blades should clean the windshield effectively and not smear or streak the windshield.

**** OOS if either wiper is inoperative, missing, or ineffective (Annual criteria). OOS when inclement weather would require its use (Spot Check criteria).**

WIRING — TRANS 300.73

All circuits of the bus shall be protected by a circuit breaker or fuse of sufficient rating to handle the current load.

INSPECT/DEFECTS- WIRING— TRANS 300.73

1. **Activate** switches on control panel and determine if all work properly. The wiring should be insulated and the connections tight and secure. All wiring systems must be protected by a circuit breaker or adequate fuse. On automatic transmissions, check to see that the neutral safety starting switch is operating. Place the vehicle in drive and attempt to start the vehicle. The vehicle shall only start when the transmission is in either "park" or "neutral".

**** OOS if wiring is showing signs of burning or short-circuiting.**

**** OOS if essential equipment is not activated when switch is turned on.**

**** OOS if vehicle starts when transmission is in any gear other than "neutral" or "park".**

SUBCHAPTER III — SPECIAL ADDITIONAL REQUIREMENTS

SPECIAL SERVICE OPENING — TRANS 300.75

(1) Every school bus used for transporting persons in wheelchairs shall have an enclosed door opening located on the right side of the vehicle that will permit the use of a ramp or lift.

(2) The door of the special opening shall be equipped with a device to hold it open.

(3) Each door shall have a window.

(4) The opening shall be equipped with material that seals out dirt, water, and fumes.

(5) There shall be a light that illuminates the platform and the area outside the opening.

(6) A drip molding shall be installed to effectively divert water from the opening.

INSPECT/DEFECTS-	SPECIAL SERVICE OPENING — TRANS 300.75
1.	Inspect the door and openings for a proper seal, a window, a hold-open device, platform lighting and a drip molding.

POWER LIFT OR RAMPS — TRANS 300.76

(1) Every school bus transporting persons in wheelchairs shall be equipped with either a power lift or ramp which utilizes the special service opening specified in s. Trans 300.75.

(2) If a school bus uses a ramp it shall have a non-slip material on the surface or may have a metal non-slip surface construction. The ramp shall be in a secured position while the bus is in motion. The ramp shall be at least 30 inches wide on the surface.

(3) A power lift may be of varying design and operation. A lift may be designed to cause only minor vehicle design change other than for the special service opening, or a different design lift may be built to raise or lower through the floor of the vehicle. Each of these designs shall have a minimum lifting capacity of 700 pounds. A label stating that the lift meets this requirement shall be either permanently affixed to the power lift in a visible location or the information may be permanently stamped in a visible location.

(4) The power source and mechanism of the lift shall be enclosed.

(5) The platform of the power lift shall be covered with non-slip material or it may be of non-slip construction. The surface shall be at least 30 inches wide.

(6) Every platform of a power lift shall be designed and constructed to prevent any movement when it is in the stored position. This requirement may be met by either a mechanical locking device or by the internal design of the lift.

(7) The power lift shall be so designed that the operator has positive control to move, stop, or reverse the lift travel at will. In addition, the lift shall be controlled by a limit switch or by-pass valve that will immediately stop the direction of travel upon contact with the ground or a foreign object.

(8) The power lift shall be so designed that the platform does not fall in the event of a power failure.

(9) The platform shall have a device on the curbside to prevent any wheelchair from rolling off when the lift is in any horizontal position other than at ground level.

(10) The power lift shall be designed to prevent the operator or the person being transported from becoming entangled or crushed during the lift operation.

(11) When in the stored position, every power lift or ramp and its associated super structure shall have all exposed sharp edges, corners, and projecting parts padded to prevent injury in the event of contact in an accident. This requirement shall not apply to the platform surface but shall apply to the sides of the platform if they are exposed and not concealed by a padded super structure or a padded barrier.

(12) If the lift does not include a padded super structure, the top of the door opening shall be covered with padding at least 2 inches high the entire width of the door opening.

(13) The lift control shall be interlocked with the vehicle brakes, transmission or door, or shall provide other appropriate mechanism or systems, to ensure that the vehicle cannot be moved when the lift is not stowed and so the lift cannot be deployed unless the interlocks or systems are engaged.

INSPECT/DEFECTS- POWER LIFT OR RAMPS — TRANS 300.76

1. **Inspect** lift for padding and protection from moving parts.

2. **Check** for lift capacity.

3. **Check** for operator positive control.
   ****OOS if operator control is inoperative or not functioning properly when used to transport occupants in wheel chairs.**

4. **Check** for nonslip material.

5. **Check** for a device to prevent the wheelchair from rolling off lift surface.
   **** OOS if platform is not equipped with roll-off protection device when used to transport occupants in wheel chairs.**

6. **Check** for power down limit switch or gravity down design.

7. **Check** that the power source is enclosed.

8. **Check** for lift power interlock device.
   **** OOS if interlock device is not installed or is not functioning properly when used to transport occupants in wheel chairs.(*Effective 3-1-95*).**

WHEELCHAIR FASTENERS — TRANS 300.77

(1) Each wheelchair shall be secured to the bus with a fastening device with sufficient strength to:

(a) Retain the chair in the event the bus overturns.

(b) Prevent the chair from moving.

(c) Prevent the chair's wheels from leaving the floor in the event of a sudden stop or start.

(2) The fastening device may be either a metal locking unit that secures the wheelchair to the wall or floor or a webbing-belt system that accomplishes the same purpose.

(3) No wheelchair may be attached to any door.

(4) A webbing belt system shall be secured to the bus at not less than 2 points. It shall be anchored in the bus frame, body posts or other metal structure. Interior paneling shall not be considered an adequate anchorage.

WHEELCHAIR FASTENERS — TRANS 300.77(Continued)

(5) A webbing belt used to secure the wheelchair to the body frame shall not be used to also secure the passenger to the wheelchair.

(6) School buses manufactured and placed in operation after January 17, 1994, and transporting passengers in wheelchairs shall comply with FMVSS 222, school bus seating and crash protection. The wheel chairs shall be secured in the following manner:

(a) In a forward facing position.

(b) By wheelchair securement devices at 2 locations in the front and 2 locations in the rear.

(c) If a 3-wheel chair, each wheel location shall be secured.

INSPECT/DEFECTS- WHEELCHAIR FASTENERS — TRANS 300.77

1.**Check** for proper wheelchair securement devices. *Buses manufactured and placed into service after January 17, 1994, must have forward facing wheelchair securement and each wheel position will need a securement device. Wheelchair securement devices must meet FMVSS 222. See Informational Memorandum 6-99-4.(04-22-99)*

****OOS if securement devices are not installed when used to transport occupants in wheel chairs.**

****OOS if securement devices are not in proper working condition when used to transport occupants in wheel chairs.**

****OOS if there is an inadequate number of devices for the total number of wheelchair positions when used to transport occupants in wheel chairs.**

**** OOS if there is an inadequate number of devices for each wheelchair when used to transport occupants in wheel chairs.**

****OOS if equipped after January 17, 1994 and wheelchair is not forward facing when used to transport occupants in wheel chairs.(04-22-99)**

SEATS AND RESTRAINTS — TRANS 300.78

(1) Seat frames may be equipped to accept seat belts or other types of restraints.

(2) Every occupant shall be secured to the wheelchair while being transported. This securement shall be separate and in addition to that required in s. Trans 300.77.

(3) Aisle-facing seats in buses transporting wheelchairs are permitted only over the wheel housing provided they are equipped with a device to prevent a passenger from sliding off either end. These seats shall be permanently mounted and shall not have a retractable seating surface.

INSPECT/DEFECTS- SEATS AND RESTRAINTS — TRANS 300.78

1. After January 17, 1994 school buses with a gross vehicle weight rating of 10,000 pounds or less shall be equipped with either a Type 1 or Type 2 restraint system at all designated seating positions. **See Informational Memorandum 6-99-3.**

2. **Inspect** for independent restraining device for passenger and chair. After January 17, 1994, this restraint system shall include a Type 2 or Type 2a shoulder restraint system as required by FMVSS 222. **See Informational Memorandum 6-99-3.**

****OOS if proper restraint system is not installed when used to transport occupants in wheel chairs.**

INSPECT/DEFECTS- SEATS AND RESTRAINTS — TRANS 300.78 (Continued)

3. **Inspect** aisle-facing seats to ensure they are equipped with a device to prevent passengers from sliding off.
**** OOS if seat-facing aisle is not equipped with device to prevent passengers from sliding off.**

4. **Inspect** to ensure they are permanently mounted and not loose or retractable.
**** OOS if seat is loose or retractable.**

5. **Inspect** condition of seats for tears, cuts and missing padding.
**** OOS if missing seat padding creates a passenger impact hazard.**

COMMUNICATIONS — TRANS 300.79

Every school bus used to transport special education or disabled students shall comply with the communication requirements found in s. Trans 301.14.

INSPECT/DEFECTS- COMMUNICATIONS — TRANS 300.79

1. Check for 2-way communication system if required.

OPTIONAL EQUIPMENT — TRANS 300.80

A school bus owner or operator shall use the following procedure to obtain authorization for equipment that is not specifically authorized by this chapter:

(1) Submit an authorization request for equipment installation to the administrator, division of state patrol, P.O. Box 7912, Madison, Wisconsin, 53707-7912.

(2) Equipment installation may only proceed following receipt of a letter of authorization from the administrator, or designee, of the division of state patrol.

(3) Provide for inspection of the vehicle and equipment if necessary.

INSPECT/DEFECTS- OPTIONAL EQUIPMENT — TRANS 300.80

1. **Check** for presence of unauthorized equipment.
**** OOS if presence of optional equipment poses a imminent hazard to the safety of the passengers.**

AUTHORIZED OPTIONAL EQUIPMENT — TRANS 300.81

The following equipment is approved:

(1) PUBLIC ADDRESS SYSTEM. A school bus may be equipped with a permanently mounted public address system that allows the driver to communicate directions by voice to students outside the bus. Mounting of any external speakers shall not interfere with driver visibility, mirrors or outside lights. Speakers may be mounted under the hood.

(2) WIDE-ANGLE REAR VIEW LENS. A school bus may be equipped with a wide-angle rear view lens mounted on the upper window of the emergency door. The lens may not cover more than 220 square inches. The lens shall be centered on the window and shall be permanently attached.

(3) RESTROOM. A restroom facility may be installed at the rearmost section of a school bus. Installation shall meet all statutes and rules related to such installation. The following conditions shall also apply:

(a) The restroom door shall be locked during pupil transportation.

(b) All walls shall be constructed of rigid material.

AUTHORIZED OPTIONAL EQUIPMENT — TRANS 300.81(Continued)

(c) The restroom or restroom door shall not interfere with access to emergency exits.

(d) There shall be no sharp edges or protrusions.

(4) BACK-UP ALARM. A school bus may be equipped with a back-up alarm system manufactured in accordance with any federal or state specifications.

(5) AIR CONDITIONING UNITS. A school bus may be equipped with air conditioning systems. The system shall be approved by the Wisconsin Division of State Patrol prior to installation.

(6) AIR FOIL. A school bus may be equipped with a yellow or black air foil system on the top rear. An air foil system shall be mounted so as not to interfere with the visibility of required lights and lettering.

(7) VIDEO CAMERAS. A school bus may be equipped with a video camera subject to the following conditions:

(a) The video camera shall be mounted in the driver's compartment above the top glass portion of the windshield. Additional mounting locations may be used upon approval by the division of state patrol.

(b) The video camera may not interfere with driver visibility and passenger entrance and aisle.

(8) BLOOD-BORNE PATHOGEN KIT. A school bus may be equipped with a blood-borne pathogen kit subject to the following conditions:

(a) The kit shall be mounted or located in the driver's compartment.

(b) The kit shall be labeled

(9) AIRFOIL. A school bus may be equipped with an airfoil designed to reduce the accumulation of snow on the rear of the bus. See Informational Memorandum 11-3-02

INSPECT/DEFECTS- AUTHORIZED OPTIONAL EQUIPMENT — TRANS 300.81

Check for presence of optional equipment and compliance with this section.

1. P.A. System — **Check** to see that system does not interfere with driver visibility, mirrors or outside lights.

**** OOS if interferes with driver visibility, mirrors or outside lights.**

2. Wide Angle Mirror — **Check** for proper mounting, location and size (220 square inches).

3. Restroom — **Check** for rigid walls. Check for sharp edges and protrusions. Check for interference with access to emergency exits.

**** OOS if sharp edges and protrusions.**

**** OOS if interferes with access to emergency exits.**

4. Back-up Alarm — **Check** for compliance with federal or state specifications.

5. Air Conditioning Units — **Check** that the system has been approved by Division of State Patrol. **See Informational Memorandum 6-99-6.**

6. Air Foil – Check for proper mounting.

7. Video Camera — **Check** for proper mounting (above windshield unless approved elsewhere). Check for interference of driver's visibility and passenger entrance and aisle.

**** OOS if interferes with drivers visibility and passenger entrance and aisle.**

8. Blood-Borne Pathogen Kits — **Check** for location of mounting. Check for labeling.

SUBCHAPTER IV — GENERAL REQUIREMENTS

REPLACEMENT EQUIPMENT — TRANS 300.85

Any item of equipment if covered by a standard in this chapter shall, upon replacement, be replaced with an item meeting the original standard. Any modification of a school bus shall be in conformity with state rules in effect at the time of the modification.

ENFORCEMENT POLICY — TRANS 300.86

(1) The enforcement policy of the division of state patrol shall take into consideration the age, condition, and equipment of buses before granting approval for their continued use. The division may not permit the use of any bus for school transportation purposes that is deemed to be unsafe or unfit for such service.

(2) In construing and enforcing the provisions of this chapter, the act, omission or failure of any officer, agent, servant or other person acting for or employed by the registered owner or the lessee of the bus, whoever has control, done within the scope of his employment is deemed to be the act, omission or failure of such registered owner or lessee. This subsection shall not apply to violations of Ch. 346, Stats., and s. Trans 300.16.

INSPECTION PROCEDURES — TRANS 300.87

(1) Upon notification by the department of transportation, or the department of public instruction, or any public school official, the owner or operator shall present all school buses for inspection at the time and place designated or the department may, at its option, inspect the school buses at the owner's place of business. All school buses shall be inspected annually.

(2) A school bus inspection report shall be completed for each school bus inspected. A copy of the report shall be provided to the school bus owner and the respective school district. Upon completion of an inspection, a school bus shall be approved or disapproved. A school bus is approved when it is found that all requirements of this chapter are met. A school bus is disapproved if defects are noted and the school bus inspection report indicates that the vehicle is "out-of-service."

(3) It is unlawful for a person to operate or permit to be operated any school bus that:

(a) Is in violation of any requirement of this chapter.

(b) Requires repairs prior to any operation.

APPLICABILITY — TRANS 300.88

(1) School buses manufactured prior to March 1, 1995 shall be subject to the rules applicable at the time the vehicle was first registered as a school bus in Wisconsin. School buses subject to previous standards may be made to conform to the standards in Ch. Trans 300 when these standards are less stringent.

(2) All school buses manufactured on March 1, 1995 or later shall be subject to this chapter and to the referenced federal motor vehicle safety standards in effect on the date of manufacture. The department shall consider the date of manufacturer as being the date on which the second stage manufacturer or the school bus body manufacturer completes the installation of the body on the chassis or the date a single manufacturer completes the unit. In the case of rebody, the completed rebody school bus has been remanufactured on March 1,1995 or later and shall meet the requirements of this chapter and the referenced federal motor vehicle safety standards in effect on the date of the rebody.

PENALTIES — TRANS 300.89

Violations of any provisions of this chapter shall be prosecuted under the governing statute. Where no penalty is provided, the violation shall be prosecuted as set forth in s. 85.16 (2), Stats.